AC Power
for Business-Critical Continuity™

Liebert AF2

User Manual

EMERSON™
Network Power

Liebert AF2

User Manual

Version: V1.1
Revision date: Sep 10, 2008

Emerson Network Power provides customers with technical support. Users may contact the nearest Emerson Network Power local sales office or service center.

While every precaution has been taken to ensure accuracy and completeness in this manual, Emerson Network Power assumes no responsibility and disclaims all liability for damages resulting from use of this information or for any errors or omissions.

Emerson Network Power pursues a policy of continuous product development and reserves the right to change the equipment design without notice.

This manual describes the following equipment:

PART NUMBERING SYSTEM

AFCE XXX V M LCD

Control Panel Type
LCD Panel
LED Panel

Mounting Arrangement
W : Wall Mount
R : Rack Mount
F : Floor Mount

Regional Voltage Setting
U : 400V
V : 380V

Capacity
035 : 35Amps
060 : 60Amps
090 : 90Amps
120 : 120Amps
155 : 155Amps
180 : 180Amps
210 : 210Amps
240 : 240Amps
.
.
Up to 960Amps

Product Line

Optional

Model Number	Part Description	Mounting Arrangement
AF2RS422485	Liebert AF2 Optional RS 422/485 Optional Interface Card	Inbuilt
AF2 Ethernet	Liebert AF2 Optional Ethernet Interface Card	Inbuilt
AFCT50017VA	Liebert AF Optional Current Transformer 500:1 7.5VA	External
AFCT1K115VA	Liebert AF Optional Current Transformer 1000:1 15VA	External
AFCT2K140VA	Liebert AF Optional Current Transformer 2000:1 40VA	External
AF2AHFLINK	Liebert AF2 Monitoring Software	CD
AFCECCULCD	Liebert AF2 Centralized Control Unit	Inbuilt
AFCEPDU	Liebert AF2 Power Distribution Unit	External
AFCEPMCORD	Liebert AF2 Power Cord for PDU	External

Preface

We thank you for the trust in selecting our **Liebert AF2**.

Liebert AF2 uses state of the art, advanced digital signal processor based control technology and IGBT semiconductors as switching devices.

Liebert AF2 units comply with EN 50178 standard in accordance with Low Voltage Directive 73/23/EC and thus are authorized to use the CE marking on respective models.

The purpose of this user's manual is to describe the operating principles for Liebert AF2 and provide users with necessary procedures in the installation and operation of the system.

CONTENTS

ILLUSTRATION CONTENTS

Safety

CAUTION

System installation, operation and maintenance should only be carried out only by Emerson Network Power authorized and trained personnel, adhering to local & international regulations.

DANGER

Before any maintenance of Liebert AF2, please make sure that the input power is off and wait at least for 3 minutes to ensure that any residual current has been completely discharged from the DC Capacitors inside the power module.

The following precautions should also be observed at all time during the installation, operation, maintenance or calibration of **Liebert AF2**:

1. Ensure that **Liebert AF2** had been properly grounded before the power is turned on. Bad grounding will cause malfunctioning or possibly an electrical shock.

2. Maintenance should be conducted with care to avoid possible electrical shock. It is strongly advised that all measurements of the circuit are checked and all stored-energy components like capacitors have been fully discharged before maintenance is executed. Safety goggles should be worn through out the maintenance process.

3. If **Liebert AF2** has been incorrectly installed, harmonics current & voltage may be amplified onto the power system and may damage other equipments and systems.

4. Incorrect operating methods may cause damage to equipment components & performance of the system.

5. Improper Switch-Off procedures of **Liebert AF2** may also cause damage to the equipment.

6. Changing of any components or parts should be done with reference to this user's manual.

1. The Functional Features of Liebert AF2

1–1. Functional Features

Liebert AF2 is a solid-state power converter that offers following advantages:

— Eliminate the harmonic currents generated by non-linear load.

— Compensate reactive power for lagging or leading power factor loads.

— Act as a virtual damping resistor to prevent possible harmonic resonance.

Liebert AF2 behaves like a harmonics current generator. It measures the harmonics generated from the non-linear loads and cancel those harmonics with newly generated, opposite phase shifted harmonics current of same amplitude. By canceling the harmonic currents in the circuit, there will be

(1) No risk of harmonic resonance;

(2) Significantly reduction in the voltage waveform distortion;

(3) Reduction in voltages drop on transformers & cables;

(4) Reduction in temperatures rise on transformers & cables;

(5) Improvement in overall power factor.

CAUTION

Liebert AF2 is not recommended to be used with load that has a characteristic of high rising rate of current. Such loads, like a Rectifiers employing phase controller with extra low inductance rating, may cause Liebert AF2 to stop operating. In certain applications equipment loads with similar characteristics generate high-frequency current. Power factor correction capacitors, certain types of passive harmonic filters, etc. may also affect the normal operation of Liebert AF2 or cause it to shut down.

1–2. Major Components

Liebert AF2 is modular designed and composed of one Control Module and several Power Modules.

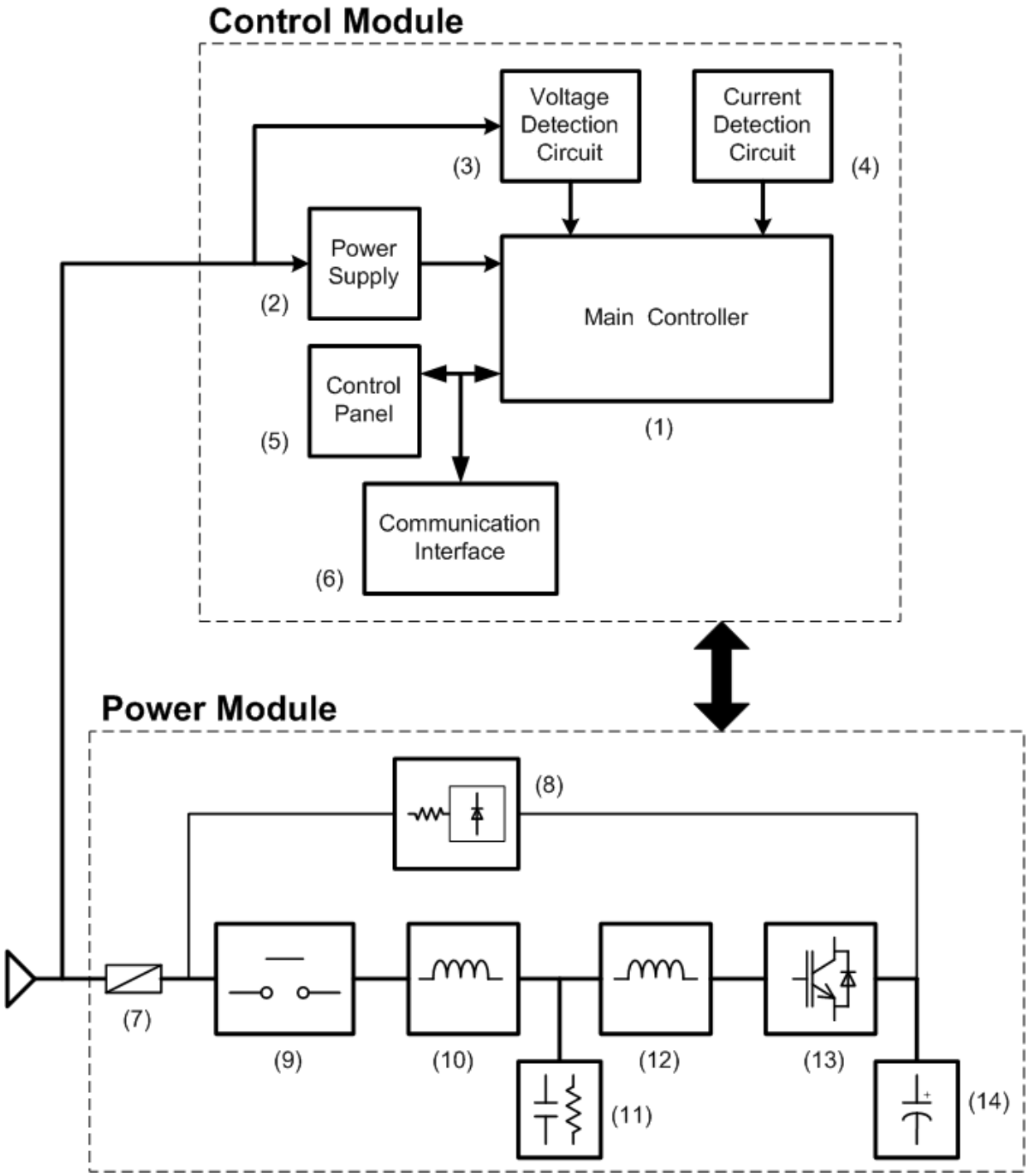

Drawing 1-1 Liebert AF2 Major Components Block

Control Module is composed of following parts:

(1) Main Controller

The control core of **Liebert AF2** controls the operation of Power Module.

(2) Power Supply

Provide DC power for the Control Module.

(3) Voltage Detection Circuit

Provide three phases AC main voltage signal for controller.

(4) Current Detection Circuit

Provide the Source or Load side current signal for controller to calculate harmonic and reactive current.

(5) Control Panel

Operate **Liebert AF2** and display the status of operation.

(6) Communication Interface

Provide several communication interfaces.

Power Module is composed of following parts:

(7) Main Fuse

Protect from over-current.

(8) Soft-start Module

The major function of this module is to pre-charge the DC Capacitor Module to avoid inrush current while **Liebert AF2** starts up. **Liebert AF2** starts operating and compensates harmonics current when DC capacitor module gets charged to a certain level.

(9) Electromagnetic Contactor Module

The Electromagnetic Contactor Module is a switch to link between IGBT power converter and power system. When **Liebert AF2** is off, the contactor will be open to isolate the IGBT power converter from the power system. On the contrary, when **Liebert AF2** is on, the contactor will be closed to link the power converter and the power system.

(10) Link Inductor Module

The Link Inductor Module is a power inductor interface between the IGBT power converter and the power system.

(11) Ripple Current Filter Module

The ripple current filter is shunt-connected passive filter. The major function is to absorb high-frequency ripple current from IGBT power converter.

(12) High Frequency Inductor

The major function of High Frequency Inductor is to filter the high-frequency ripple current from IGBT power converter.

(13) IGBT Power Converter Module

The major function of the IGBT Power Converter Module is to convert the energy provided by the power system to harmonic and reactive power compensated current and then feed them back to the power system to reduce harmonic current and improve the power factor.

(14) DC Capacitor Module

The DC Capacitor Module stores the energy and maintains a constant DC voltage, which is controlled by the IGBT power converter.

1–3. System Structure Diagram

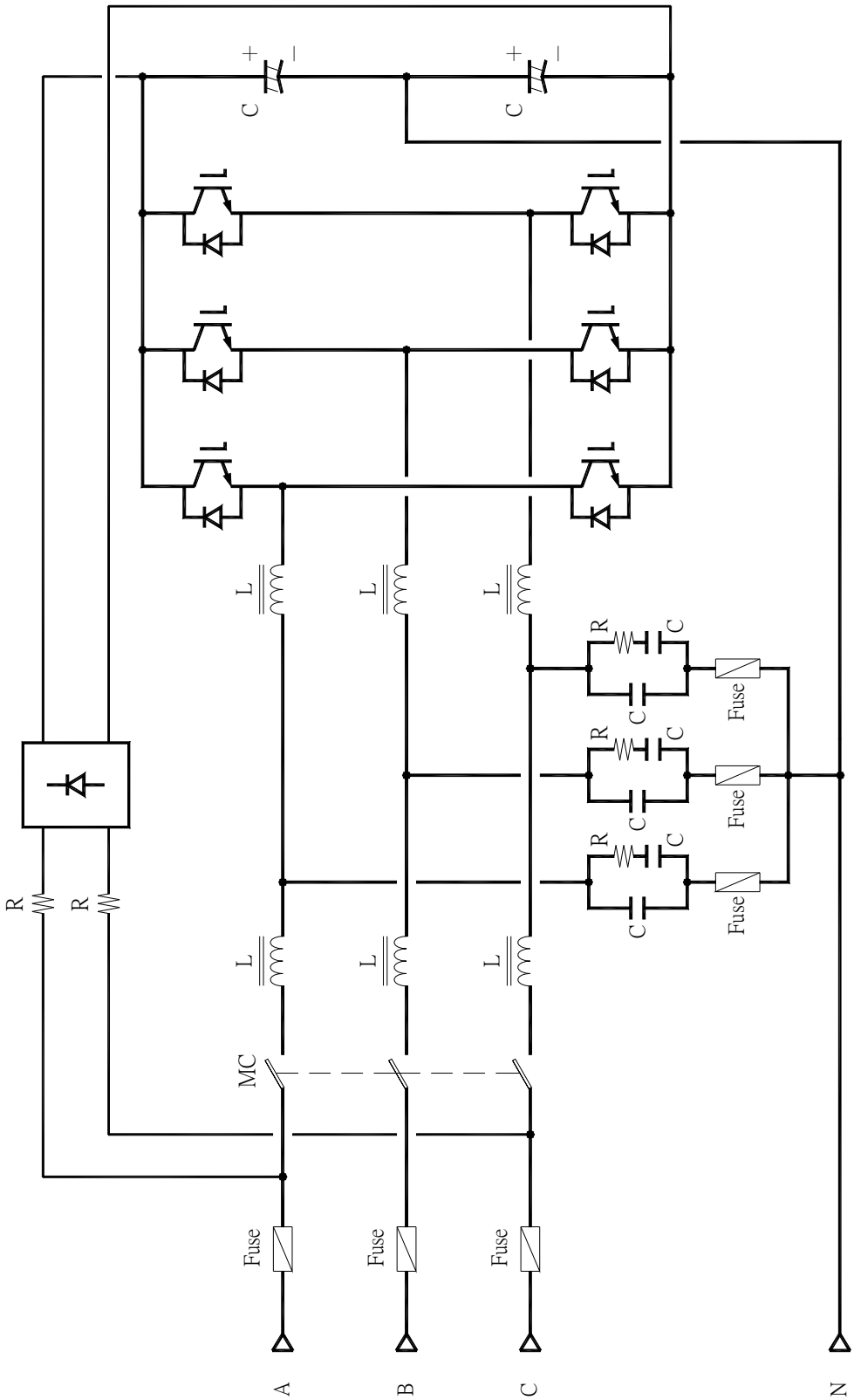

Drawing 1-2 Liebert AF2 Power Module System Structure Diagram

1–4. General Characteristics and Specifications

1-4-1. General Characteristics

Storage Temperature	-20ºC ~ +70ºC
Operating Temperature	+ 0ºC ~ +40ºC
Relative Humidity	< 95%
Operating Altitude	<1000 m
Reference Harmonic Standard	EN 61000-3-4 , IEEE 519-1992
Reference Design Standard	EN60146
Safety Standard	EN50178
Electromagnetic Compatibility	IEC 61000-4-2, IEC 61000-4-3, IEC 61000-4-4 IEC 61000-4-5, IEC 61000-4-6

1-4-2. Power Module Specification

Input Voltage	400V +15%,-20% 380V +21%, -15%
Phase/Wires	3 phase 4 wires/3wires
Frequency	50/60±3 Hz (Auto Sensing)
Maximum Compensation Current/Phase/Power Module	35 Arms
De-rating Compensation Current/Phase/Power Module (1)	30 Arms
Maximum Compensation Current for Natural/Power Module	105 Arms
Inrush Current	Less than rated current
Current Limitation	Yes, at full correcting
Maximum Heat losses	650 Watt per Power Module
Color	RAL9011 (PANTONE Process Black C)
Ingress Protection	IP20
Dimensions (WxDxH)	440 x 710 x 131mm (3U)
Weight	31 Kg (when unpacked)

(1) When 2 and above Power Modules work in power scalable configuration, the power module will downgrade automatically from 35A to 30A. It means total capacity will be 60A/90A/120A when 2/3/4 400V power modules are connected in parallel.

1-4-3. Control Module Specification

Input Voltage	400V +15%,-20% 380V +21%, -15%
Phase/Wires	3 phase 4 wires/3wires
Frequency	50/60±3 Hz (Auto Sensing)
Compensated Harmonic Orders	From 2nd to 51st order. Individual Harmonic Order selectable up to 12 orders (2nd ~31st), that works simultaneously. Higher Order Group Harmonic Compensation (32nd~51st) by Disable/Enable function.
Power Factor Correction	Compensate both lagging and leading reactive power. Power factor can be programmed from 0.7 lagging to 0.7 leading
CT Ratio	Can be set. Primary Current: 100A~10000A Secondary Current: 1A
CT Location	Source Side for Close Loop Control Load Side for Open Loop Control
Harmonic Attenuation Ratio	Typical >10
Response Time	< 20 msec
Number of Power Modules, controllable by one Control Module	Up to 4 Power Modules.
Parallel Operation	Up to 8 Control Modules. The maximum Filter capacity up to 960A.
Maximum Heat losses	50 Watt per Control Module
Color	RAL9011(PANTONE Process Black C)
Ingress Protection	IP20
Dimensions (WxDxH)	440 x 710 x 86mm (2U)
Weight	5 Kg (when unpacked)

1-4-4. Control Panel Specification

LED Control Panel	a. 4 Status LED indicators: POWER ON, FILTERING, FULL CORRECTING and ERROR b. ON/OFF and RESET key pads. c. 4 Status LED indicators for Power Module. d. 8 alarm LED indicators for Diagnostic Message.
LCD Control & Display Panel (Optional)	a. 4-status LED indicators: POWER ON, FILTERING, FULL CORRECTING and ERROR b. ON/OFF and RESET key pads. c. 4 Directional Scrolling Keys/Enter Key/Escape key. d. LCD Display Panel offers following functions: ● Meter: parameter, waveform and spectrum. ● Event Log: Up to 300 records (FIFO). ● Configuration: Compensation Setting, Compensation Logic Control and System Setting. ● Multi-language Setting: up to 10 different languages.

1-4-5. Communication Interface Specification

Dry Contact (Standard Configuration)	a. 5 Output Dry Contacts b. 1 Input Dry Contact c. 1 EPO
Communication Interface	Standard : RS232/USB Optional: RS485/RS422 Ethernet Card
Programming	Setting by expert service software or LCD control panel.
Monitoring Software (Optional)	***Liebert AF2 Monitoring Software***
Communication Protocol	J-Bus/MOD Bus Protocol

1-4-6. Floor Mount Panel Specification

Maximum Installation Capacity	Panel with Bezel: 180Arms (2 Control Modules + 6 Power Modules) Panel without Bezel: 240Arms (2 Control Modules + 8 Power Modules)
Color	RAL7021
Ingress Protection	IP20
Dimensions (WxDxH)	600 x 1000 x 1950mm
Maximum Weight	130 Kg (when unpacked)

1–5. Compensation Ability

As long as **Liebert AF2** is started up and running, it provides a harmonic current compensation as well as power factor correction; therefore, the current on the source side is less than that on the load side. In addition, the improvement of the voltage waveform distortion and the voltage regulation may increase the harmonic current on the load side. Therefore, the compensation capability analysis shall be down when **Liebert AF2** is running.

$$HAR = I_{Lh} / I_{Sh}$$

HAR : Harmonic attenuation ratio
I_{Lh} : Harmonic current at load side
I_{Sh} : Harmonic current at power source side

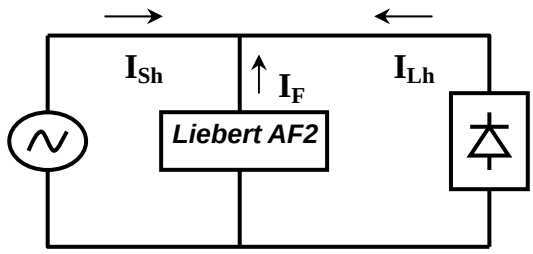

Note: All measurements should be carried out when* Liebert AF2 *is functioning normally.

1–6. Capacity Selection

Liebert AF2 compensates harmonic current comprehensively, which does not require to measure the impedance of the power system or to analyze the load harmonic spectrum or its individual amplitude. As long as the estimated load harmonic current amplitude to be compensated is measured, then select **Liebert AF2** model, which has the output compensated current rating greater than load harmonic current, for example, if the load harmonic current is 40A, you are recommended to choose 60A **Liebert AF2**.

Even if the selected filter offers insufficient compensated harmonic current, **Liebert AF2** does not have a risk of overloading. It has current-limit capability up to its full rated compensating capability; therefore, it will not shut down or malfunction as most of passive filters do. You will be required to add Power Modules or Control Module in parallel at site to increase its compensation capability. There are 8 Control Modules that can operate in parallel to provide and the maximum capacity of **Liebert AF2** up to 960A.

2. The Function Explanations of Control and Power Modules

Liebert AF2 is composed of Control Module and several Power Modules. The maximum output current of **Liebert AF2** is depended on the numbers of the Power Modules.

2–1. Control Module Function Explanations

The DSP (Digital Signal Processor) based Control Module is the core control center of **Liebert AF2**. This analyzes the load current and sends control signals to Power Modules to compensate the compensated harmonic and reactive current, required by the load.

The control panel of the Control Module can be either LED type or LCD type. The Control Module has communication capability through its communication slots. Necessary communication capability can be added to the unit to monitor **Liebert AF2** under variety of communication platforms. The control panel, communication slots and wiring positions are as illustrated in Drawing 2-1.

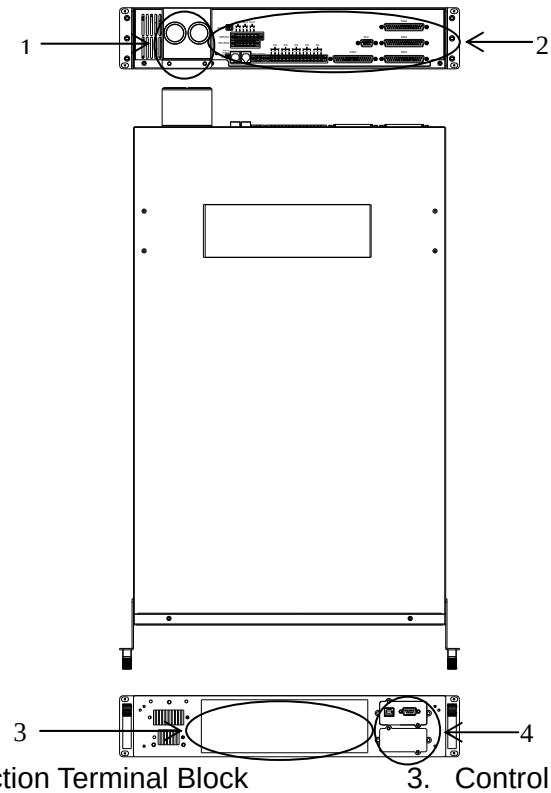

1. Power Connection Terminal Block
2. Control Signal Connectors
3. Control Panel
4. Communication Slots

Drawing 2-1 Control Module external interfaces position

2-1-1. Power Connection Terminal Block

N: Neutral Line
A: Phase 1
B: Phase 2
C: Phase 3
G: Grounding
(Power Earth)

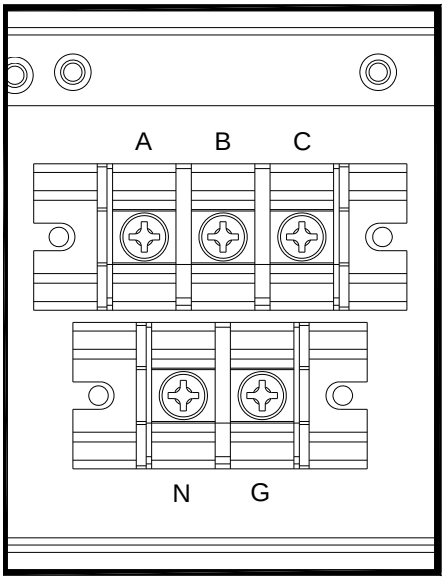

Drawing 2-2 Power Connection Terminal Block of Control Module

2-1-2. Control Signal Connectors

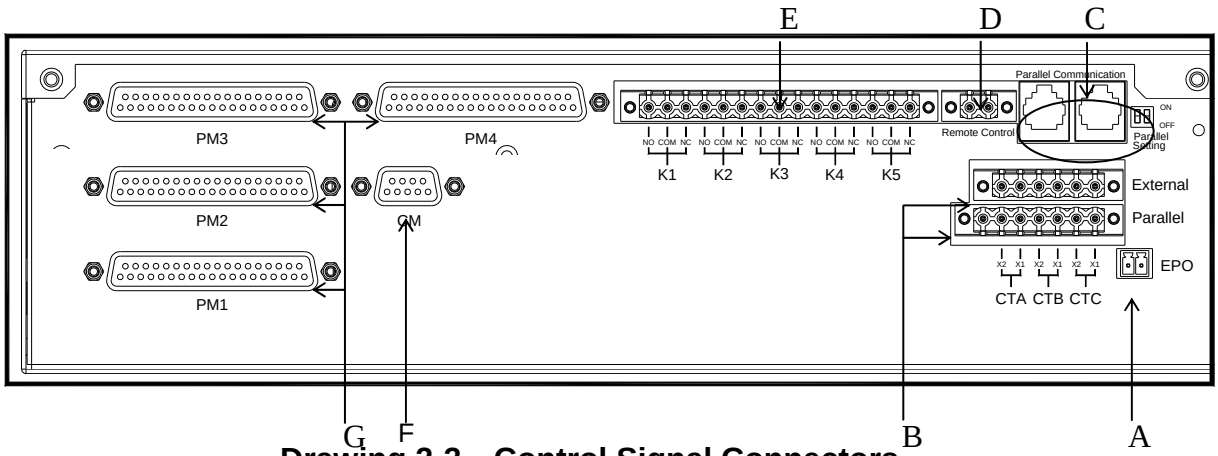

Drawing 2-3 Control Signal Connectors

A. Remote Emergency Power Off (EPO)
B. CT Connectors
C. Parallel Communication Ports
D. Input Dry Contact
E. Output Dry Contacts
F. Control Signal Cable 1 Connector
G. Control Signal Cable 2 Connectors

A. Remote Emergency Power Off (EPO)

Liebert AF2 is offered with remote EPO switch terminal that allows to turn off the filter in emergency from a remote location by connecting a NO (Normally Open) switch. The filter can be turned off immediately by shorting Pin1 and Pin2.

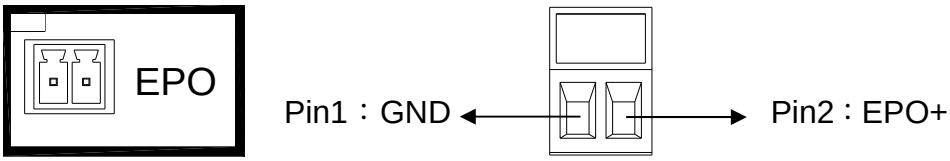

Drawing 2-4 EPO Switch

B. CT Connectors

External CT's, which can be installed on either on Source or Load side, should be wired up to 'External' terminal as shown in Drawing 2-5.

'Parallel' terminal gets connected with the Parallel CTs which have to be installed at the total output of the all filters when several Control Modules operate in parallel.

You may install these CTs as indicated as Drawing 2-5. The wiring connections are explained in detail in section 3-4-1.

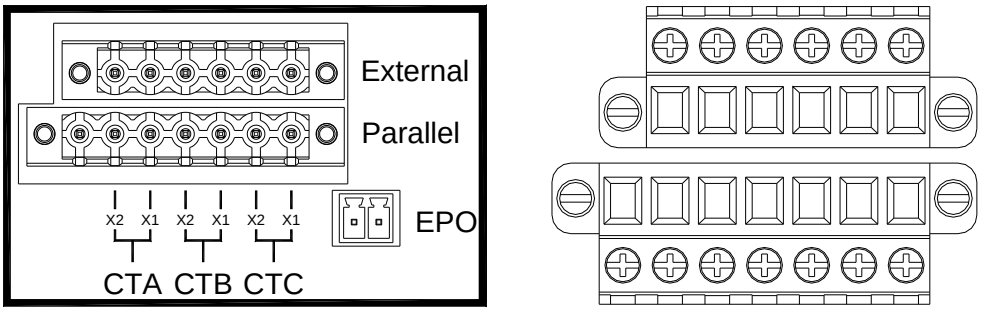

Drawing 2-5 CT Connectors

C. Parallel Communication Ports

It is used for parallel function. It is not advised to intercross or mix parallel communication cables together with power cables to avoid unnecessary noise interference. If there is no possibility to avoid such from happening, please put them at 90 degree or keep a least distance of 20cm as indicated in Drawing 2-6.

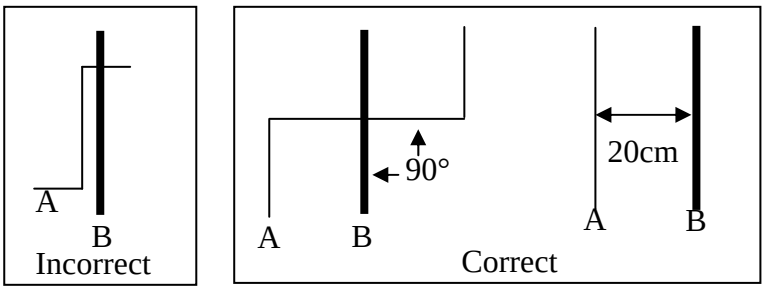

A→parallel communication or Control Signal cables
B→ Power cables

Drawing 2-6 Recommended Layout of Parallel Communication Cable

The parallel communication cable type is RJ11 as Drawing 2-7. The maximum total lengths of the parallel communication cables shall be less than 20 meters and they shall be connected as a ring type as shown in Drawing 2-8. To make sure a good communication quality, you have to set the switches of two farthest Control Modules to “ON” position as shown in Drawing 2-8.

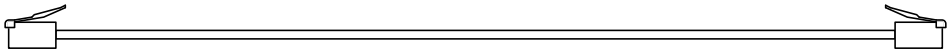

Drawing 2- 7 RJ11 Cable for Parallel Communication

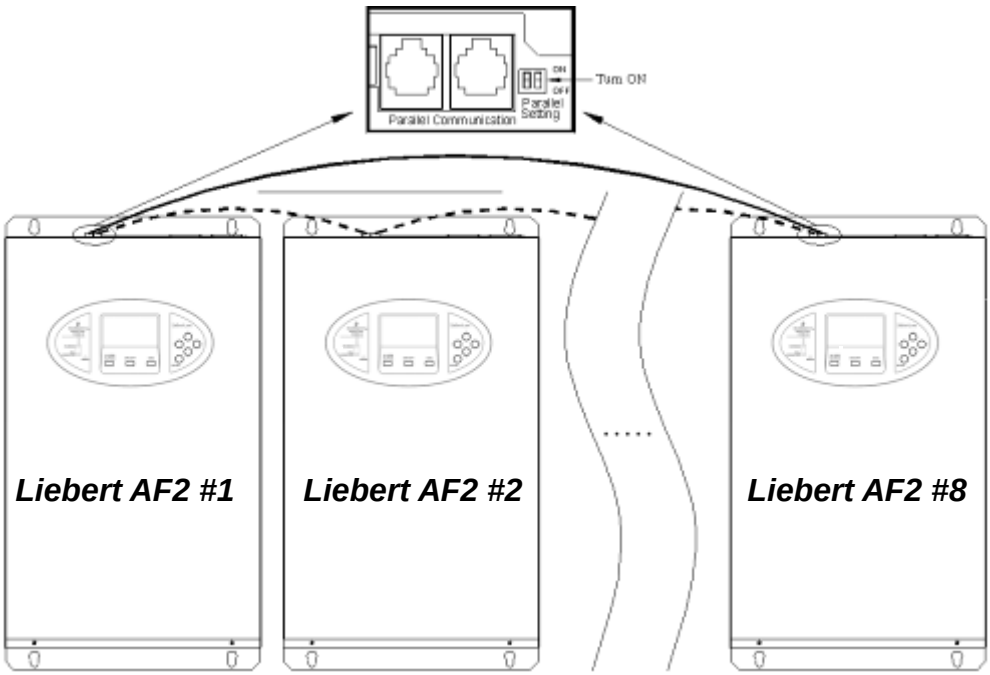

Drawing 2-8 Connections for Parallel Communication Cables

The procedure of the Parallel Communication Cable connection is shown as below:

Step 1: Remove the fixed plate of the communication port.

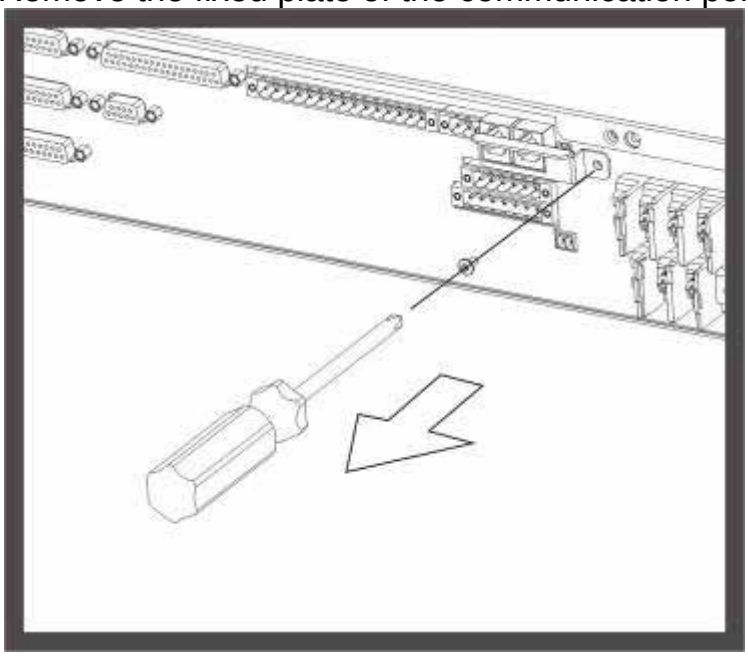

Step 2: Put the fixed plate through the RJ11 communication cable.

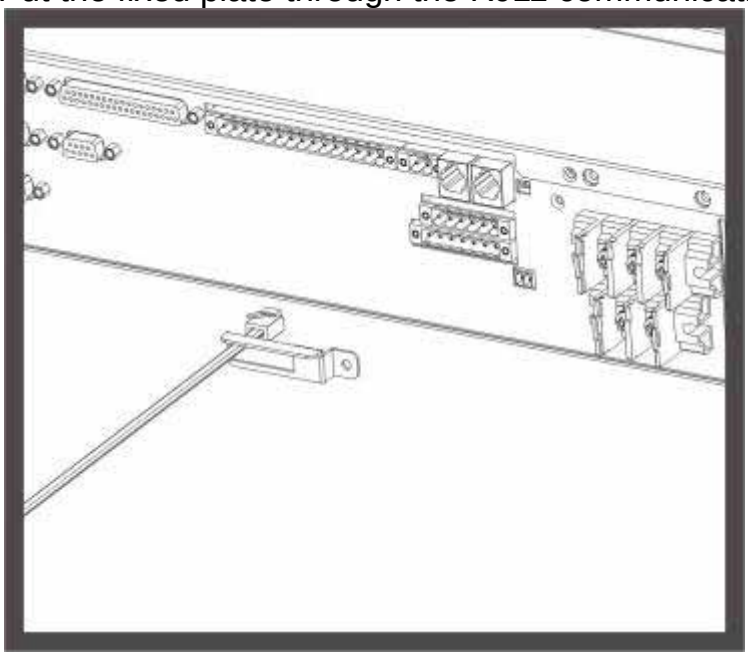

Step 3: Put the second RJ11 cable through the fixed plate.

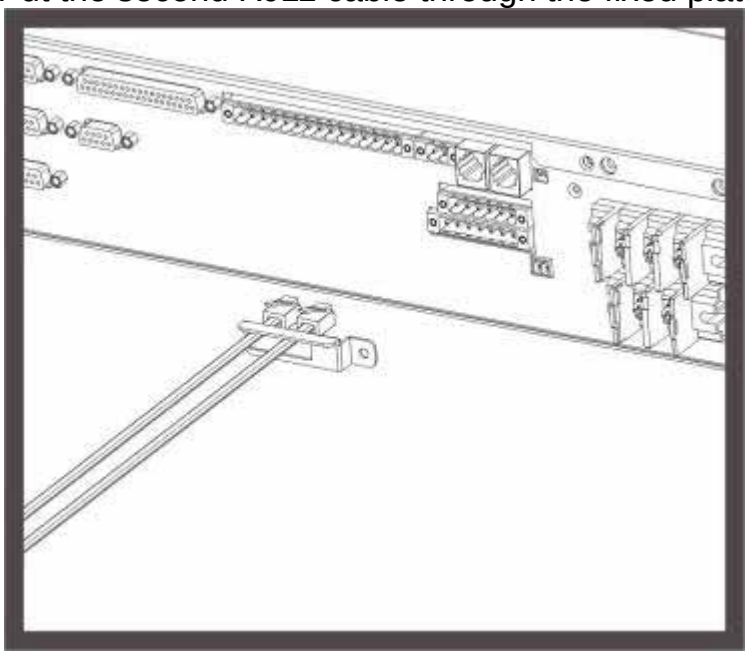

Step 4: Plug in the two RJ11 Jack cables to the communication port.

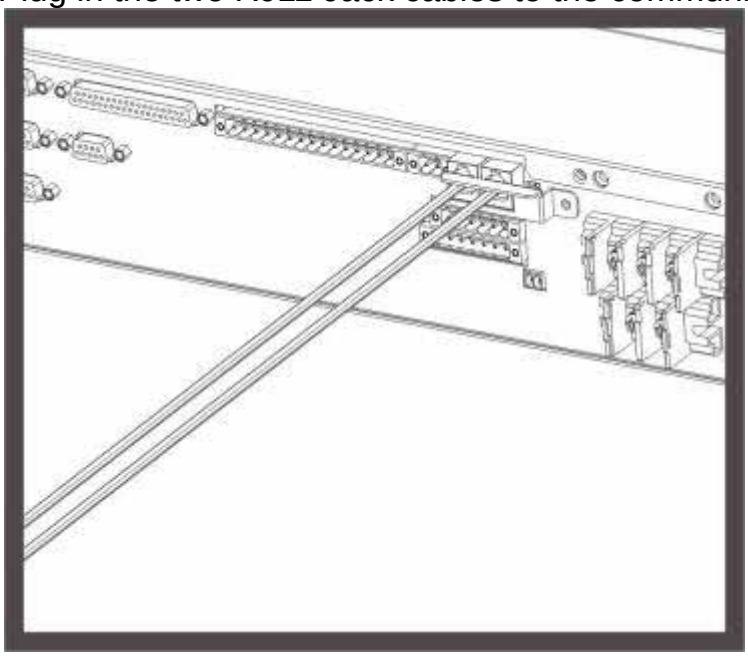

Step 5: Fasten the fixed plate back to the rear panel of the Control Module properly.

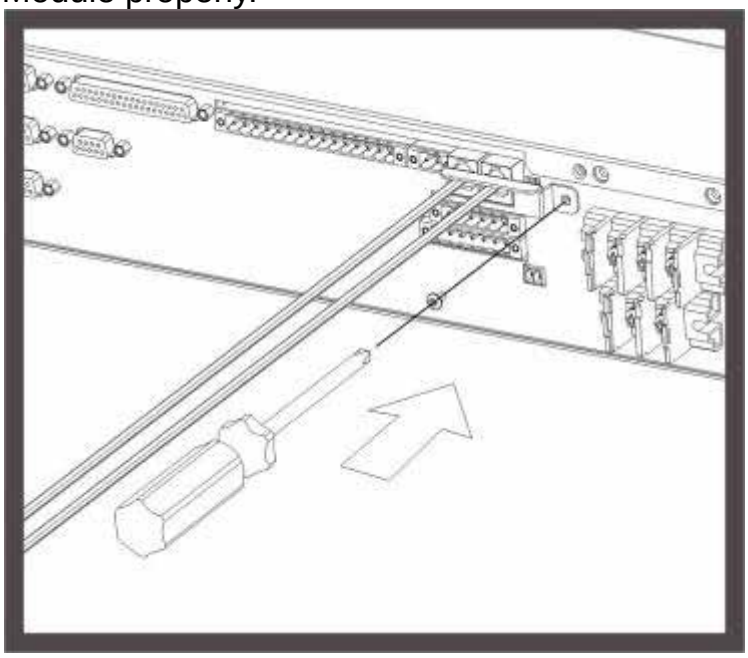

Step 6: The communication cables are installed properly.

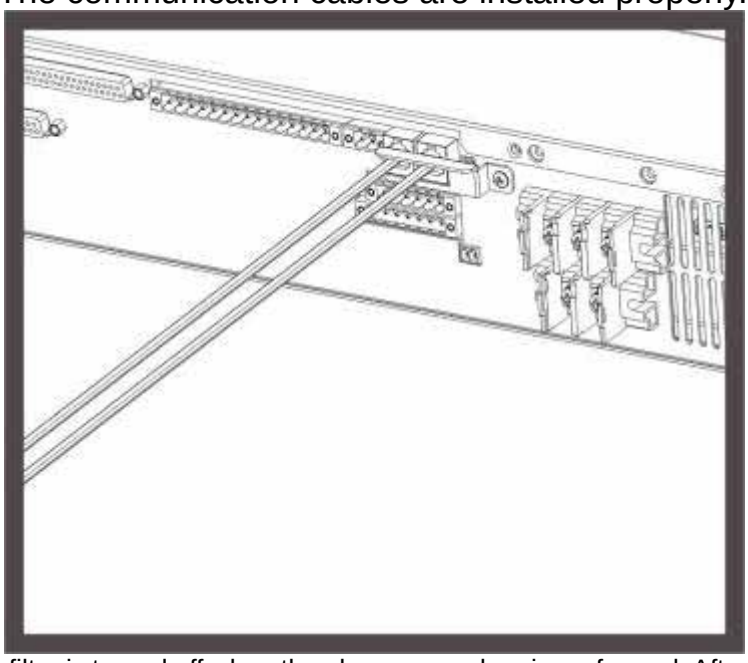

Notice: Make sure the filter is turned off when the above procedure is performed. After the connections of the RJ11 cables are complete, parallel configuration for parallel numbers and the parallel identification numbers of the Control Modules need to be set with the help of configuration set menu on LCD panel or expert service software, available with Emerson Network Power authorized service personnel. In case of wrong setting, **Liebert AF2** can not be started up and signal alarm. Please consult with local Emerson Network Power authorized service agent for correct setting of the parallel configuration.

D. Input Dry Contact

It is connected to an external switch, which might be used to turn on/off the filter. There are two operation modes that can be selected, one is Mode 0 and the other is Mode 1. The default mode set is Mode 0, but you may change the operation mode to Mode 1 via ***Liebert AF2 Monitoring Software*** or consult with local Emerson Network Power authorized service agent.

Operation Mode: Mode 0：

Please refer to Drawing 2-9 to connect it to an external Tack Switch in order to control on/off the filter. If you press the switch for 2 seconds, the filter will change the on/off status and vice versa as indicated as Drawing 2-10.

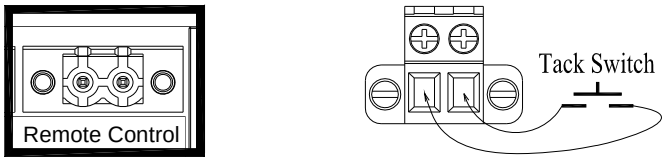

Drawing 2-9 Input Dry Contact Connections for Mode 0

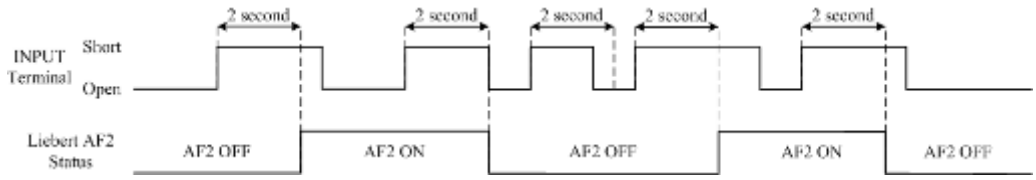

Drawing 2-10 The operation method for Mode 0

Operation Mode: Mode 1：

Please refer to Drawing 2-11 to connect it to an external Switch in order to control on/off the filter. If you press to close the switch for 2 seconds, the filter will be started up; on the contrary, the filter will be shutdown as indicated in Drawing 2-12.

When the operation mode is set at Mode 1, please close the external Switch first, and then press the ON/OFF keypad on the Control Panel to set the filter at standby mode (FILTERING LED is blinking.). Then, you may control on/off the filter from the external Switch now.

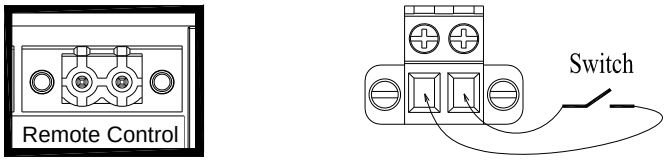

Drawing 2-11 Input Dry Contact Connections for Mode 1

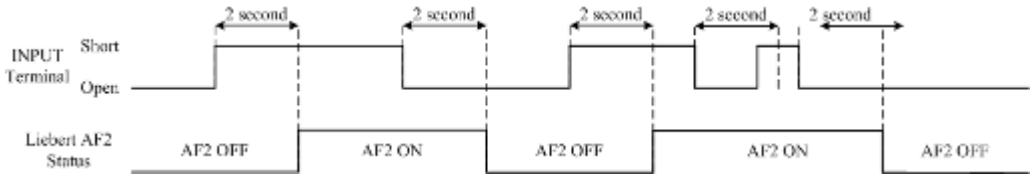

Drawing 2-12 The operation method for Mode 1

E. Output Dry Contacts

There are 5 Output Dry Contact Connectors in **Liebert AF2** those are offered as standard for remote monitoring. The pin assignments are as Drawing 2-13. These output dry contacts are programmable. User can change the definition for each contact by ***Liebert AF2 Monitoring Software*** or consult with local authorized service agent. The default definitions of the output dry contacts as Chart 2-1 and the programmable definitions as Chart 2-2.

Electrical specification: 250Vac/2A

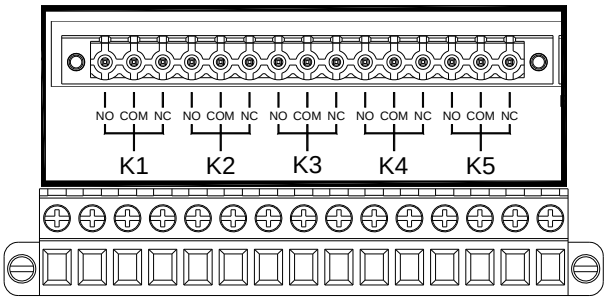

Drawing 2-13 Pin Assignments of Output Dry Contacts

Chart 2-1 Default Definition of the Output Dry Contacts

Port	Function	Description
K1	POWER ON	The control logic circuits of Control Module are energized.
K2	FILTERING	The filter is providing the compensating current to the load.
K3	FULL CORRECTING	The capacity of the filter is not enough for the load needed. At this time, The filter should be in current limit and continue to compensate the current up to its rated value.
K4	ERROR	There are some possible external abnormal conditions or internal abnormal breakdown. The filter should stop to provide any compensating current.
K5	DC Bus Error	The DC Bus voltage is abnormal.

Chart 2-2 Programmable Definitions of Output Dry Contacts

Item	Event	Item	Event
1	POWER ON	2	Filtering
3	Full correcting	4	ERROR
5	MCCB Tripped	6	Fuse Blown
7	Input Power Abnormal	8	IGBT Fault
9	High Frequency Resonance	10	Over Peak Current
11	Over Current	12	Over Temperature(Power)
13	Fan Fault	14	Temp. Sensor Disconnected
15	DC Bus Error	16	DC Bus Under Voltage
17	DC Bus Over Voltage	18	External CTA Reversed
19	External CTB Reversed	20	External CTC Reversed
21	Parallel CTA Reversed	22	Parallel CTB Reversed
23	Parallel CTC Reversed	24	System Voltage Abnormal
25	System Under Voltage	26	System Over Voltage
27	Frequency Error	28	Phase Rotation Error
29	Control Board Error	30	Control Board EEPROM Error
31	Control Panel EEPROM Error	32	Power Supply Error
33	Current Cable Disconnected	34	CAN Bus Disconnected
35	Parallel Disconnected	36	Parallel ID Duplicated
37	Parallel Setting Error	38	Over Temperature(Control)

F. Control Signal Cable 1 Connector

It is connected to the Power Module. When more than one Power Modules are connected, please connect the wires to the PM1 of the Master Power Module.

G. Control Signal Cable 2 Connectors

There are 4 Control Signal cables(PM1~PM4), which means you may connect up to 4 Power Modules and make sure you may connect the Power Module in sequence from PM1 to PM4. The one connected to PM1 is the Master Power Module as shown in Drawing 2-14.

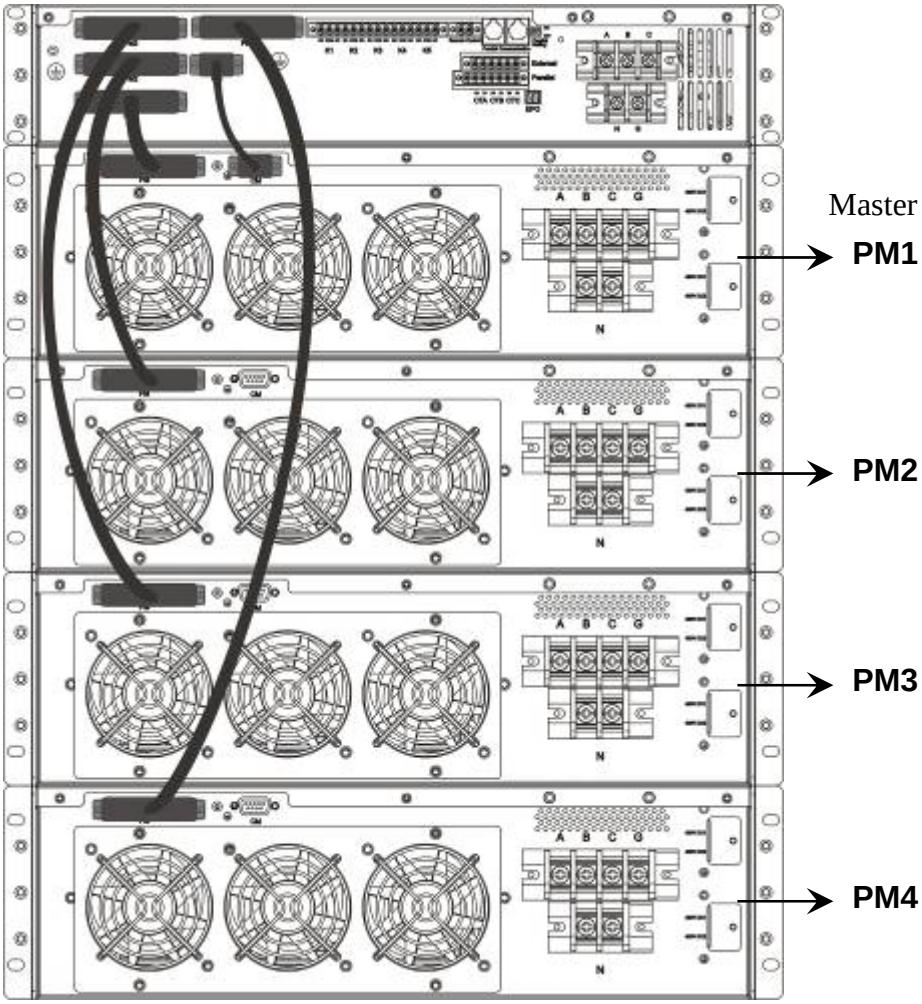

Drawing 2-14 Connections for Control Signal Cables

2-1-3. Control Panel

There are two types of control panels provided to meet customers' satisfactory.

A. LED Control Panel Function Explanation

The LED control panel offers the filter status with LED indicators, which may provide end user sufficient information in control and operation.

It is composed of 4 filter status indicators, 4 Power Module Status indicators, 8 Error Message Alarm indicators and 2 control keypads, of which functions are:

— To control the On/Off of the filter.
— To silence Alarm and clear fault status.
— To indicate the operation status of the filter.
— To indicate the status of the Power Module.
— To indicate error message.

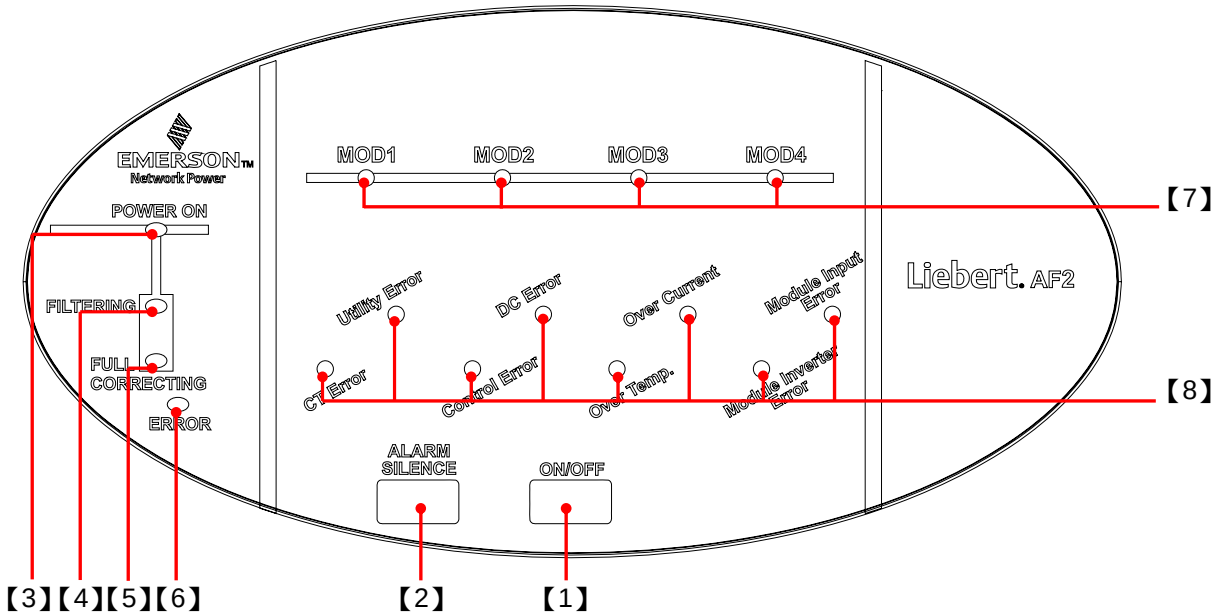

Drawing 2-15 LED Control Panel

1. ON/OFF Keypad
2. ALARM SILENCE Keypad
3. POWER ON Indicator
4. FILTERING Indicator
5. FULL CORRECTING Indicator
6. ERROR Indicator
7. Power Module Status Indicators
8. Error Alarm Indicators

The LED indicators on the LED control panel are described as Chart 2-3.

Chart 2-3 LED Indicators on the LED Front Panel

Indicator	Color	Description
POWER ON	Red	**Red** LED indicator On, indicating that the control logic circuits of Control Module are energized.
FILTERING	Green	**Green** LED indicator On, indicating that the filter is providing the compensating current to the load. This indictor light will switch off when the filter is shut down by user operation or system malfunction. If the LED is blanking, it means the filter is in standby mode.
FULL CORRECTING	Yellow	**Yellow** LED indicator On, indicating that the capacity of the filter is not enough for the load needed. At this time, The filter should be in current limit and continue to compensate the current up to its rated value.
ERROR	Red	**Red** LED indicator On, indicating that there are some possible external abnormal conditions or internal abnormal breakdown. The filter should stop to provide any compensating current.
M1	Green	The **Green** LEDs indicates the control signal cable has connected Power Module with Control Module. When the Green LED(s) is(are) blinking, it means the Power Module(s) is(are) out of order.
M2	Green	
M3	Green	
M4	Green	
CT Error	Red	1. The phase rotation or polarity of the External CTs is reversed. 2. The phase rotation or polarity of the Parallel CTs is reversed.
Utility Error	Red	1. The system voltage is over-voltage, under-voltage or high distortion. 2. The system frequency is out of range. 3. The phase rotation of system voltage is not clockwise.
Control Error	Red	1. Controller is not working properly. 2. Control board EEPROM is not working properly. 3. Control panel EEPROM is not working properly. 4. The power supply of control module is out of service. 5. The CT signal connection inside the Control Module is incorrect. 6. The LED is blinking, indicating that the communication between the control panel and the control board is disconnected. 7. The LED is blinking, indicating that the parallel communication is not working properly or the parallel communication setting is not correct.
DC Error	Red	The DC Bus voltage is abnormal.
Over Temp.	Red	1. The Power Module was over-heated. 2. The cooling fan(s) is(are) out of order. 3. The wire of the thermal detecting sensor is disconnected. 4. The Control Module was over-heated.
Over Current	Red	1. Peak current of IGBT power converter was too high. 2. Output rms current of IGBT power converter was too high.
Module Inverter Error	Red	1. IGBT or IGBT driver circuit was fault. 2. Instantaneous current of IGBT was too high. 3. Too many high frequency ripple current generated from IGBT power converter.
Module Input Error	Red	1. Electromagnetic contactor tripped or malfunctions. 2. The fuse was broken. 3. The input power source of the Power Module is abnormal.

B. The LCD Control Panel Function Explanation

The LCD control panel offers the filter with LCD indicators, which may provide the end user sufficient information in graphics.

The LCD control panel is composed of 8 control keypads, 4 status indicators and 1 LCD display, of which major functions are:

— To control the On/Off of the filter.
— To silence alarm or clear fault status.
— To indicate all operation status of the filter.
— To display the parameters related power system.
— To display the waveforms of voltage and current.
— To display the measurement and spectrum of harmonics.
— To offer a HID interface.

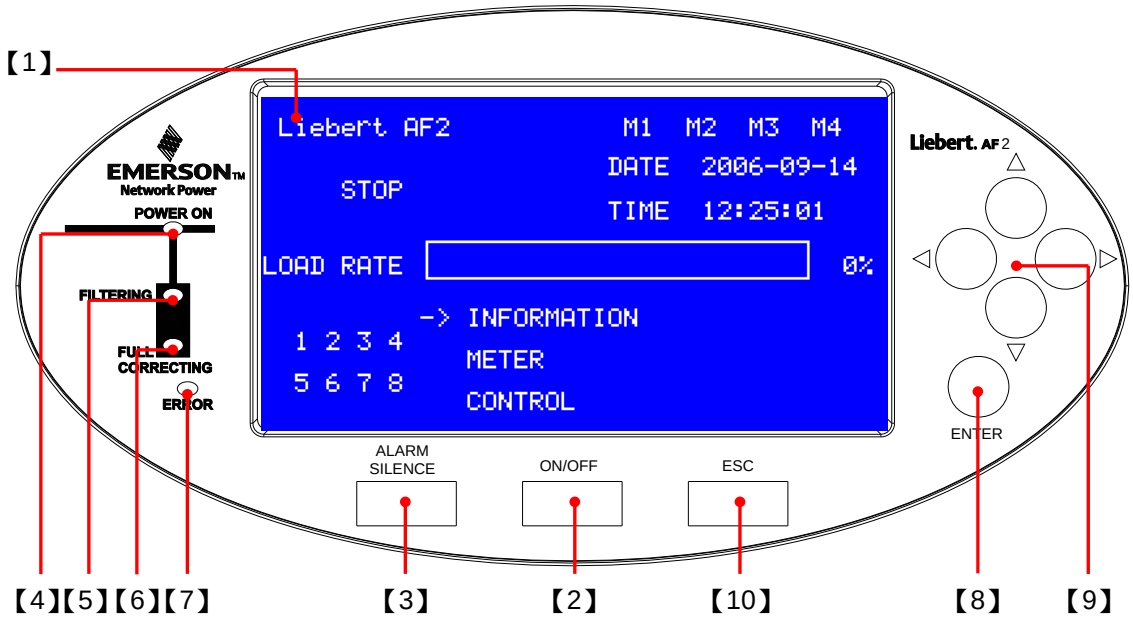

Drawing 2-16 LCD Operation Panel

1. Graphic Display Screen
2. ON/OFF Keypad
3. ALARM SILENCE Keypad
4. POWER ON Indicator
5. FILTERING Indicator
6. FULL CORRECTING Indicator
7. ERROR Indicator
8. Confirmation/Enter Key
9. Directional Scrolling Keys
10. Escape/Cancel Key

The 4 status indicators on the LCD control panel are offered the same functions that on the LED front panel. You may refer to Chart 2-3 for details.

2-1-4. Communication Slots

Liebert AF2 offers both RS232 and USB interface card as standard ,and RS485/RS422 and Ethernet cards are as option.(Please refer to Chapter 5 for more in detail.) The installation of those cards is indicated as Drawing 2-17.

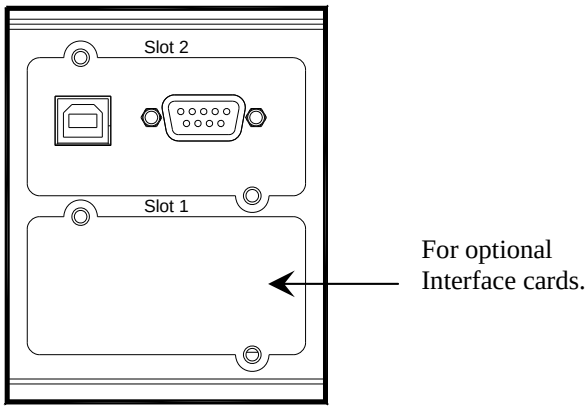

Drawing 2-17 Communication Slots

A. RS232 Communication Prot

Communication Interface Configuration：

baud rate	Programmable，2400 bps~57600bps. Default setting 57600bps
data length	8 bits
stop bit	1 bit
parity	NO

Pin Assignment:

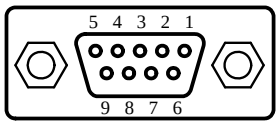

2 → Tx
3 → Rx
5 → Ground

B. USB Communication Prot

Comply with USB V.1.0，1.5Mbps
Comply with USB HID (Human Interface Device) V.1.0

Pin Assignment:

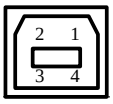

1 → VCC (+5V)
2 → D-
3 → D+
4 → Ground

The filter is accompanied with a setting tool under Windows OS application, which may help you to set the IP, Baud Rate & ID of the filter. For more information, please refer to Chapter 5. **Liebert AF2 Monitoring Software** are available as an option. Please contact Emerson Network Power representative for details.

2–2. Power Module Function Explanation

The Power Module is designed to compensate harmonic current and reactive power. The wiring position as shown in Drawing 2-18.

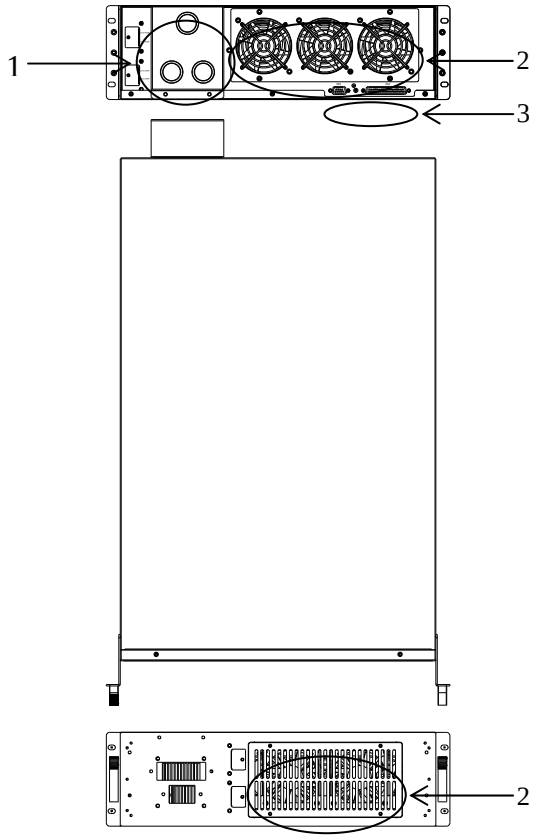

1. Power Connection Terminal Block
2. Cooling Fan and Ventilation Openings
3. Control Signal Connectors

Drawing 2-18 Power Module wiring position

2-2-1. Power Connection Terminal Block

N: Neutral Line
A: Phase 1
B: Phase 2
C: Phase 3
G: Grounding (Power Earth)
DC1&DC2: DC Bus Terminal

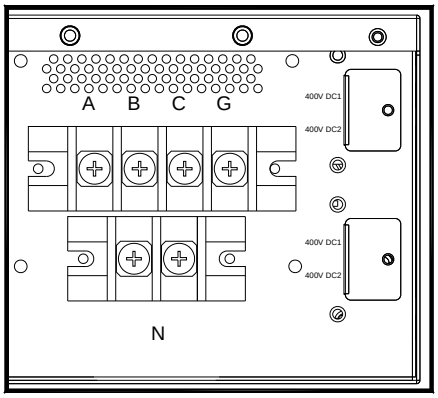

Drawing 2-19 Power Connection Terminal of the Power Module

When multiple Power Modules are connected in parallel, please connect the DC1&DC2 of each Power Module in parallel. The procedure is described below:

Step 1：Remove the cover of the terminal.

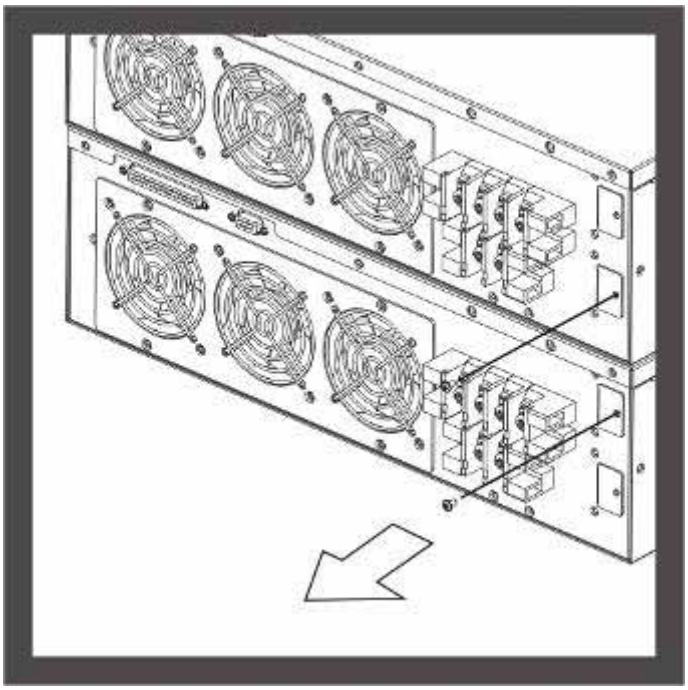

Step 2：Connect the wires to the terminals as indicated below.

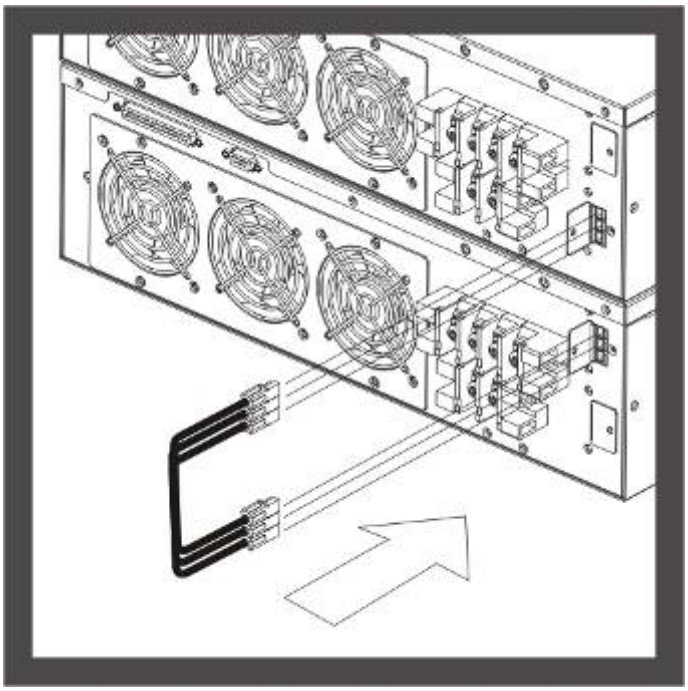

Step 3：Use the plates as illustrated to fix the wires properly.

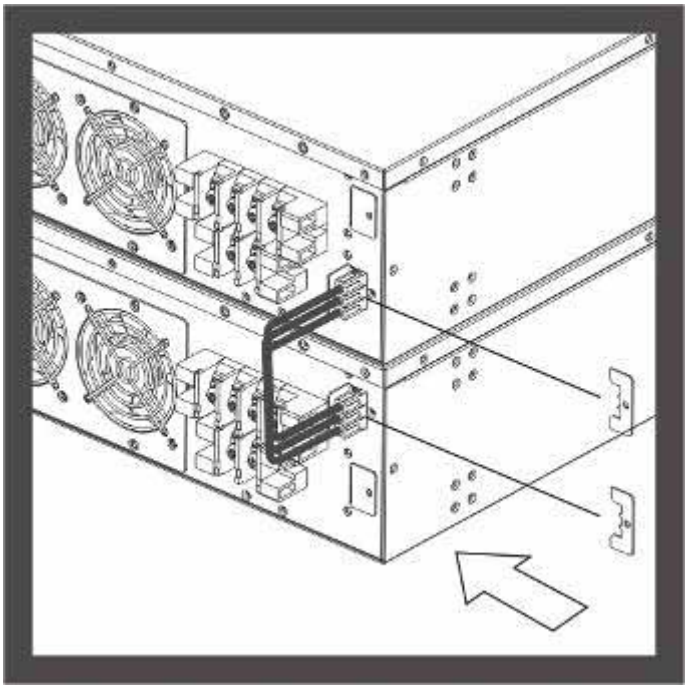

Step 4：Then, fasten the covers with screws properly.

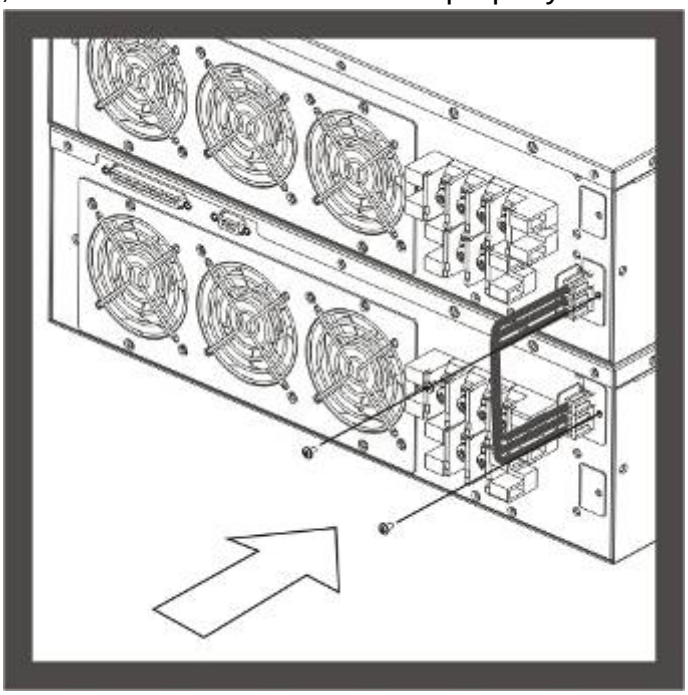

Step 5: The DC Bus connection for 2 Power Modules are done completely.

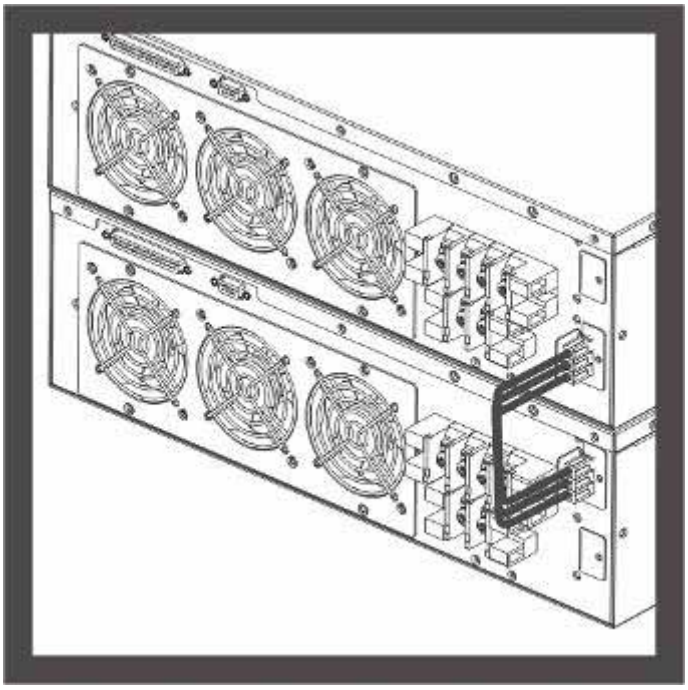

Step 6: This is to show how 4 Power Modules are connected properly.

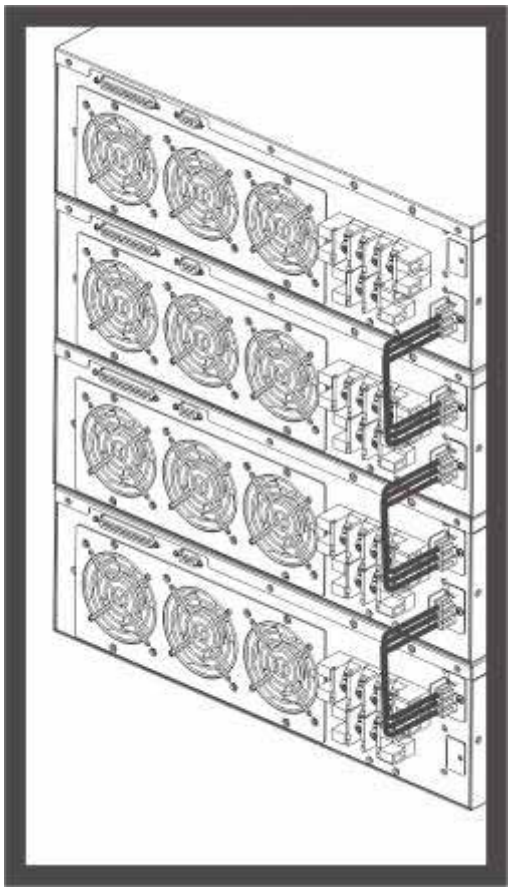

2-2-2. Cooling Fan and Ventilation Openings

The purpose of the cooling fan and ventilation openings is to get rid of the heat generated by the Power Module. To avoid the Power Module from overheat; make sure there is no obstacle to block the ventilation openings.

2-2-3. Control Signal Connectors

There are two control signal connectors as Drawing 2-20. One is CM and the other is PM, which connect to the Control Module. The connection is as Drawing 2-14. Only Master Power Module has to connect both CM and PM connectors with Control Module, other Power Modules only connect PM connector.

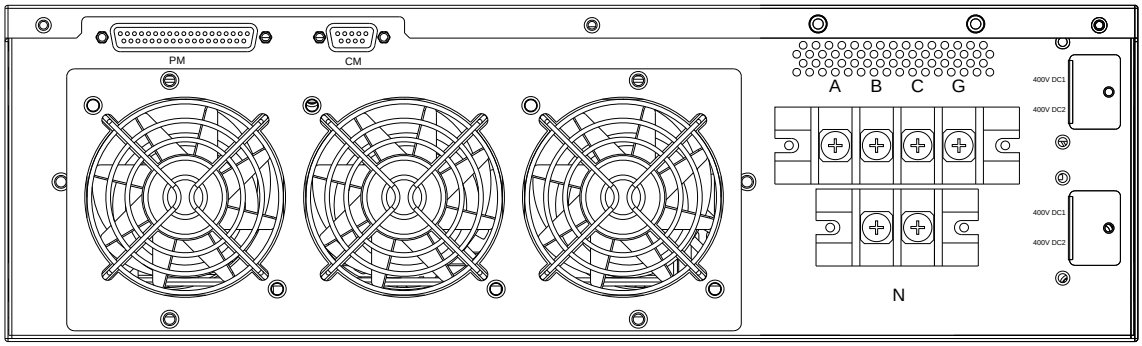

Drawing 2-20 Rear Panel of Power Module

3. Installation and Wiring

3–1. Installation Environment

1. **Liebert AF2** is a power electronic equipment with sophisticated controlling devices. Installation environment might impact & affect its operational reliability and life time. The filter is equipped with cooling fans to reduce the heat generated during operation. Therefore, do not block ventilation openings during installation.

2. Do not install the filter in an environment, which is too dusty, over-heat, too humid, corrosive and vibrated. It is strongly recommended to install the filter in a clean, ventilated and dust-free room with controlled temperature within it's specified value.

3–2. General Requirement for Ventilation & Maintenance

3-2-1. Rack/Floor Mount type

Please make sure that the followings are taken into considerations during it's installation.

1. Keep at least 300mm free space for the filter to make sure the air-flow of the filter is not blocked as illustrated below.
2. Make sure a cooling fan is installed in the top of the rack cabinet to reduce the heat generated from the filter itself.
3. Keep at least 1000mm free space in front of the filter for future maintenance purpose.

Rack/Floor Mount Type

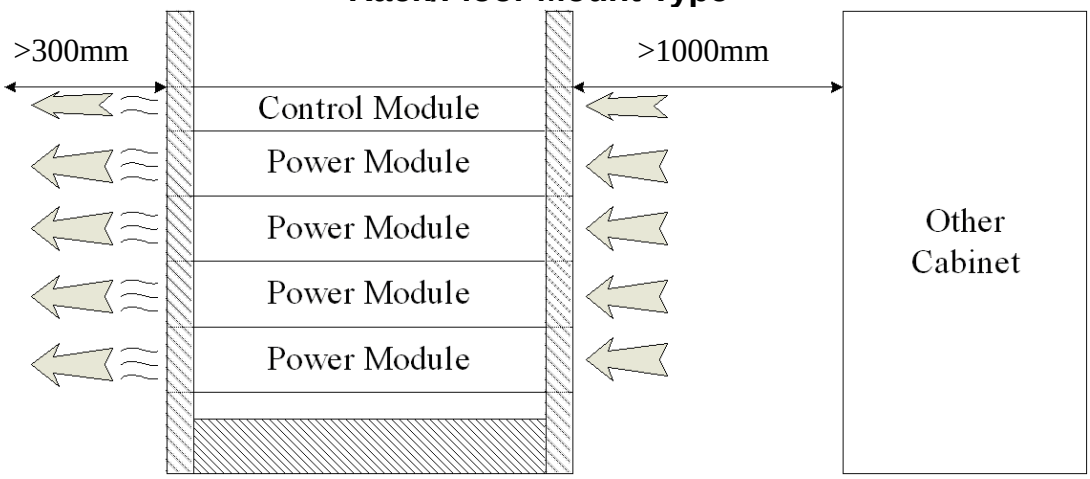

3-2-2. Wall Mount Type

While installation, make sure the followings are concerned:

1. Keep at least 300mm air-flow space for both the top and bottom of the filter and do not block the air-flow of the filter.
2. Keep at least 600mm space from the front of the filter for future maintenance purpose.
3. The space between two filters shall be at least 100mm from each other.

Wall Mount Type

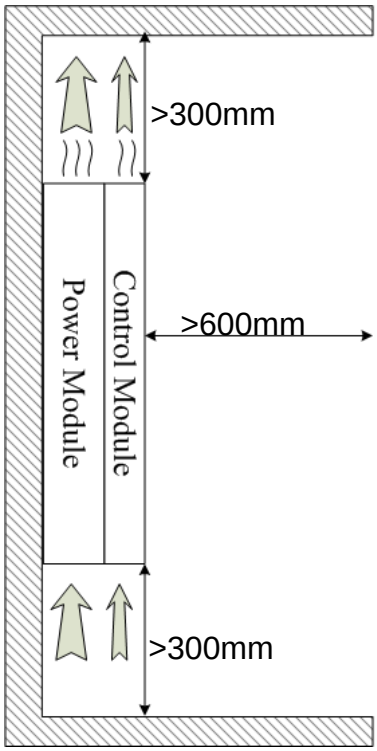

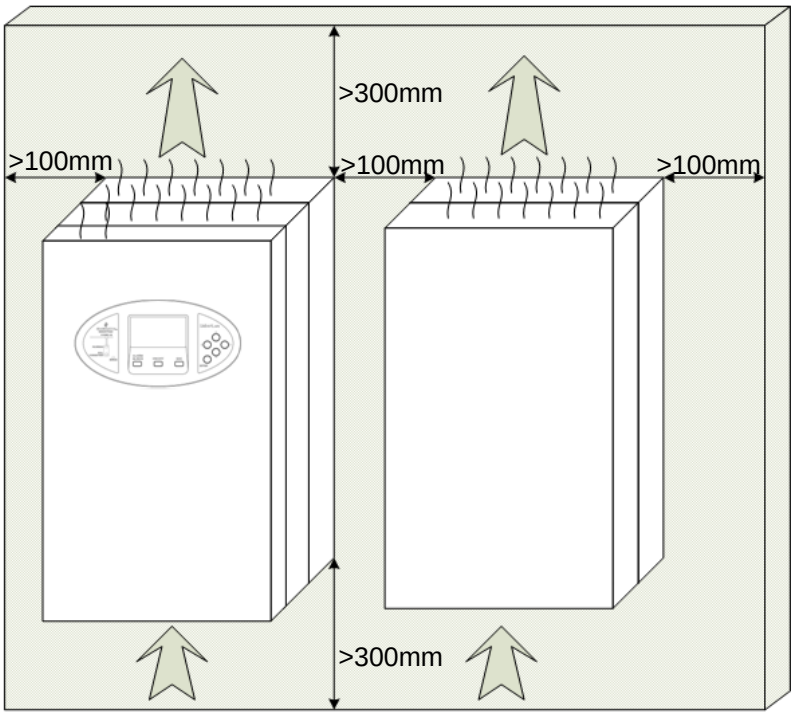

3–3. Installation

3-3-1. Rack Mount Installation

Step 1:

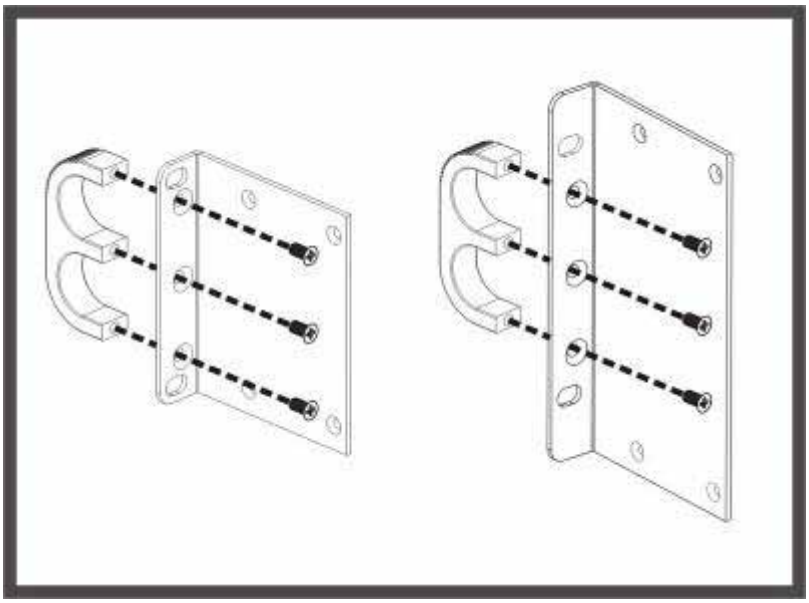

Step 2:

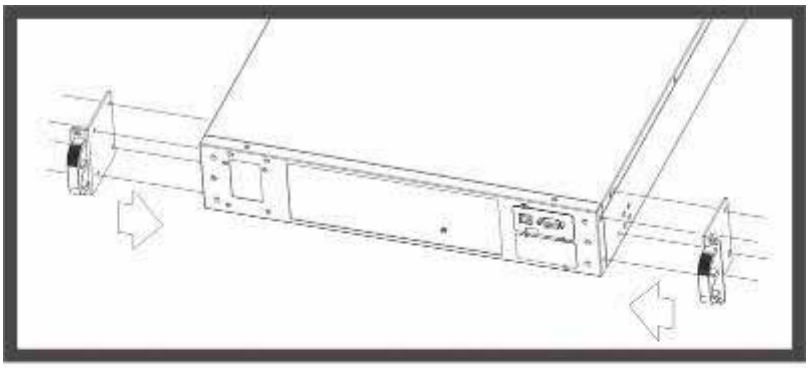

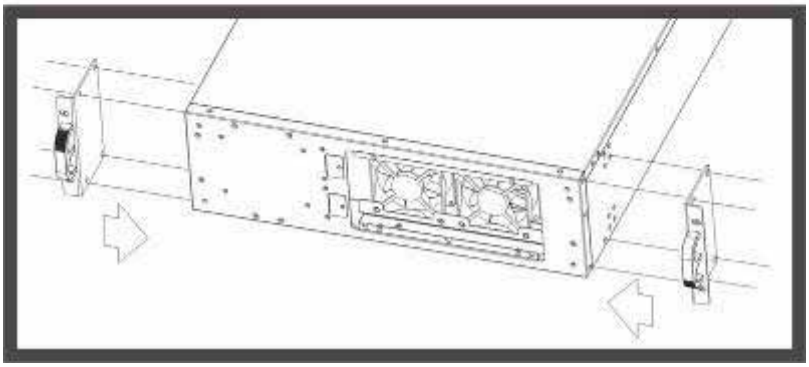

Step 3:

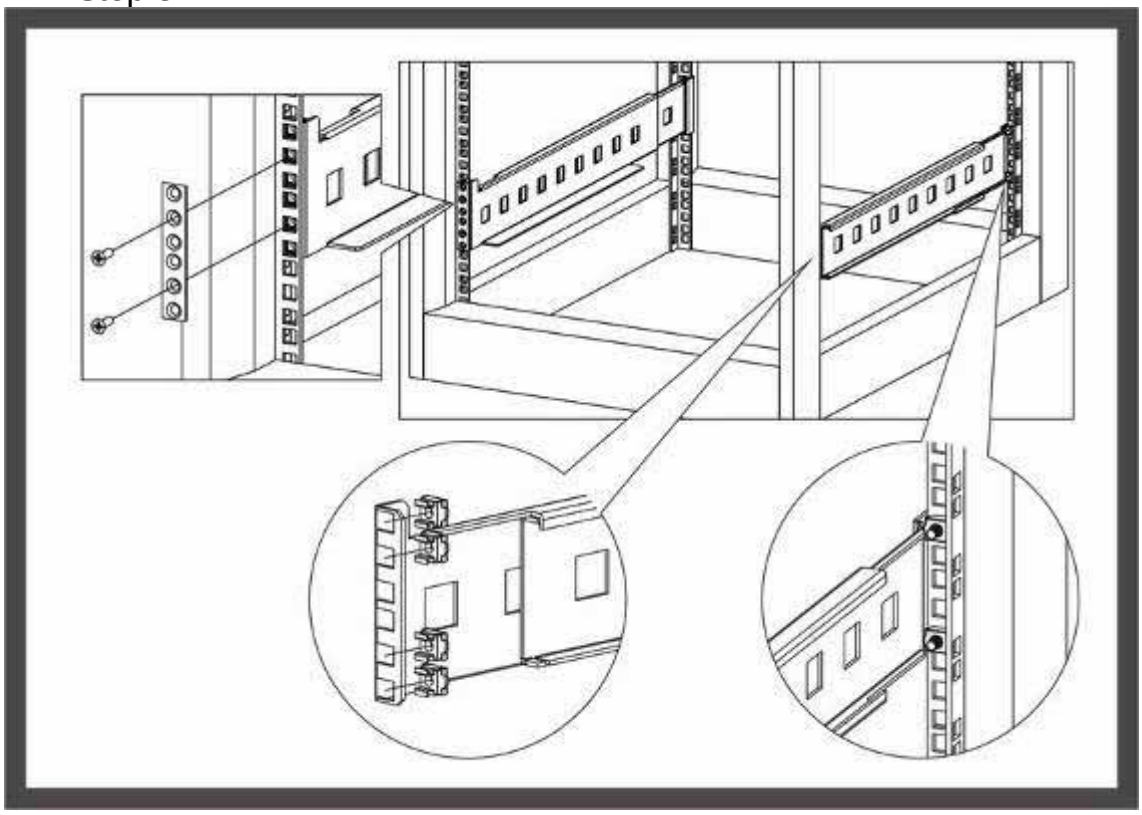

Step 4:

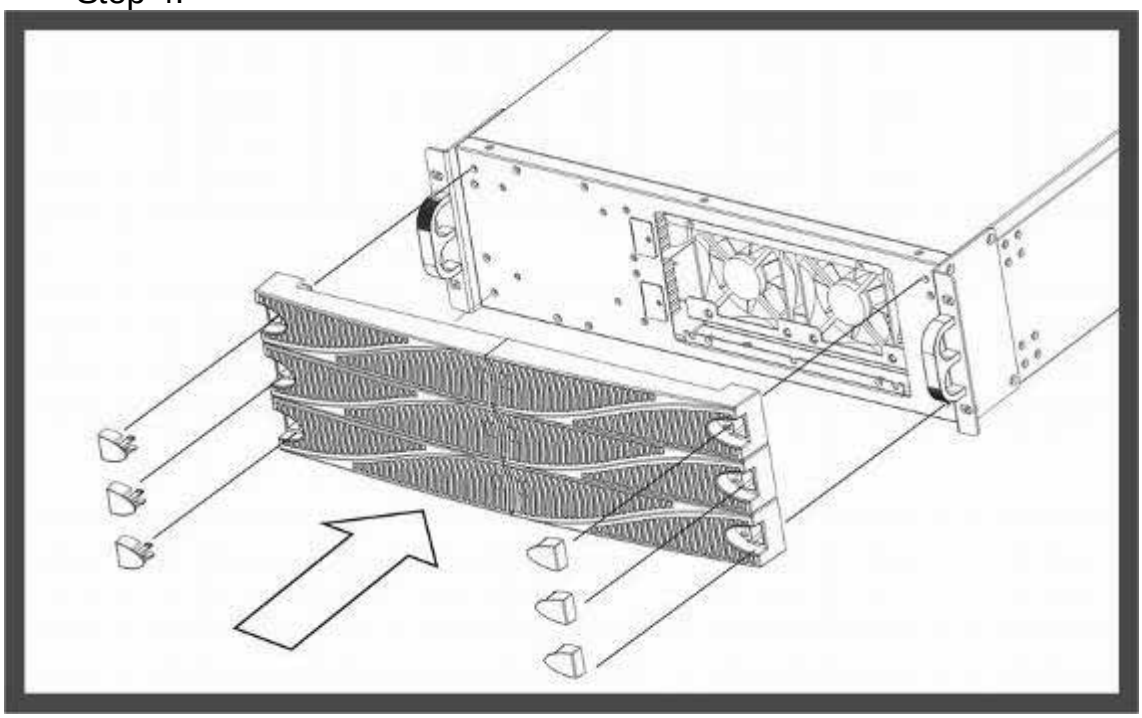

Step 5:

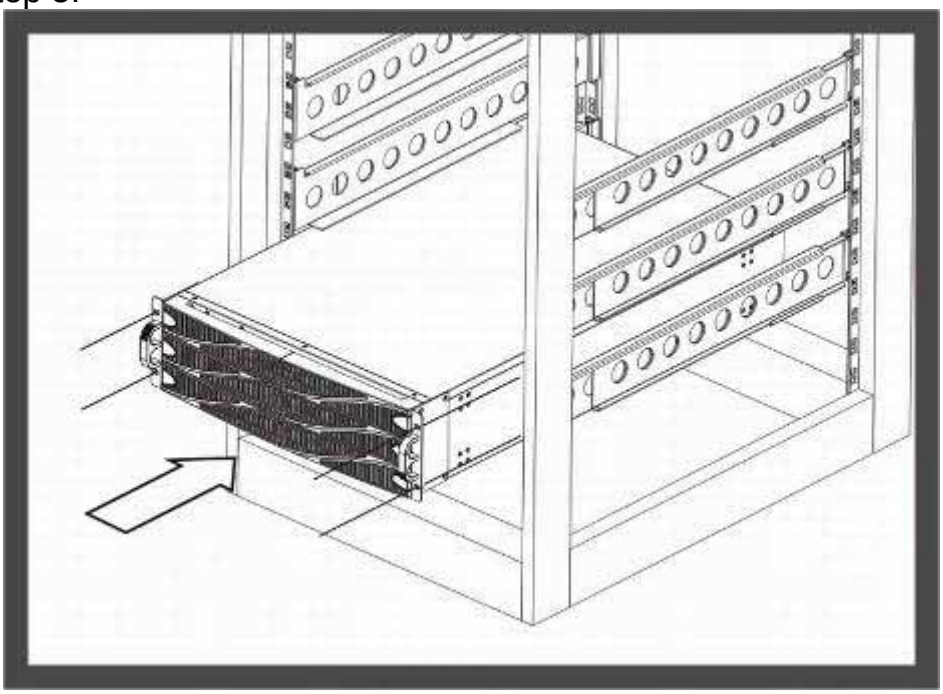

Step 6:

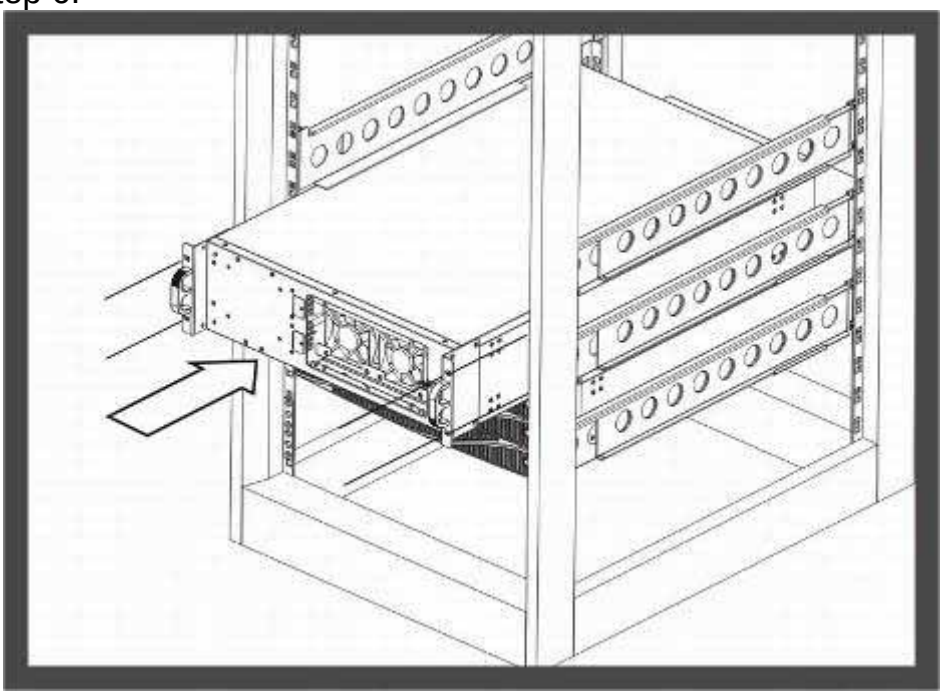

Step 7:

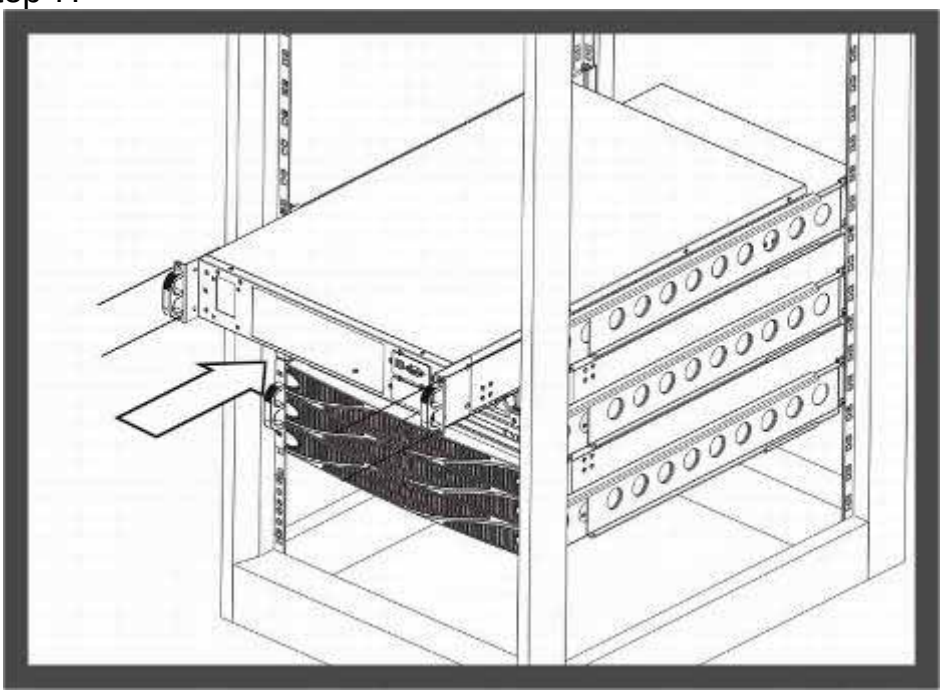

Step 8:

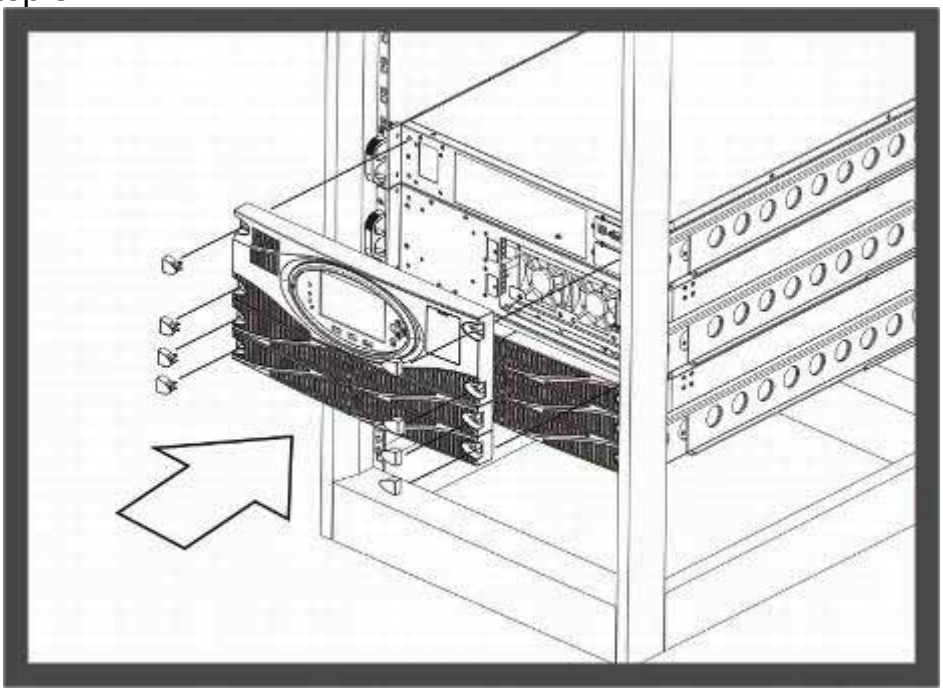

3-3-2. Wall Mount Installation

3-3-2-1. Bezel of Control Module installation

Step 1: Loosen screws on the top cover of Control Module and then remove the top cover.

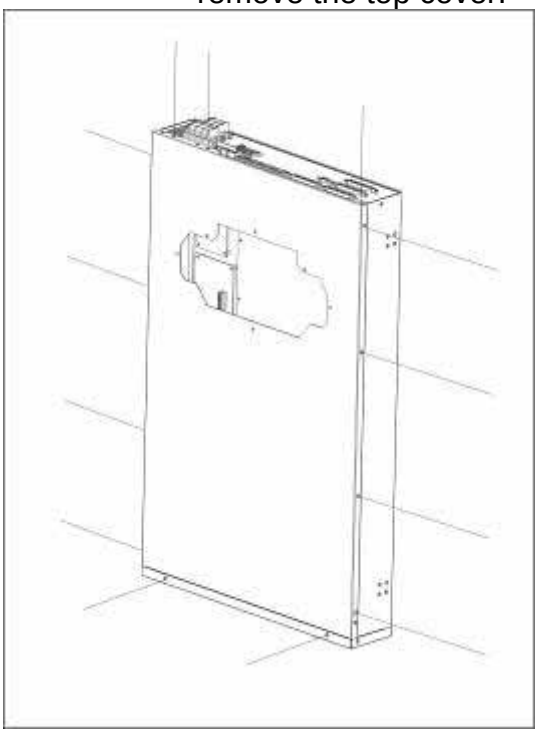

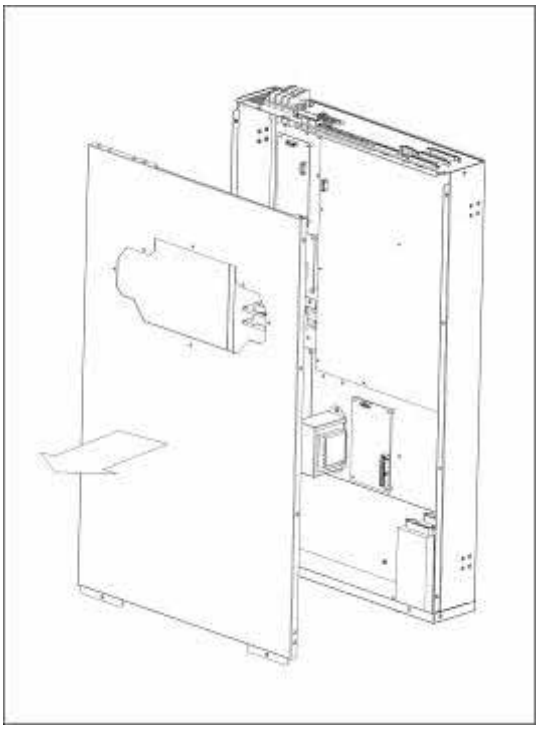

Step 2: Install the bezel on the top cover of Control Module.

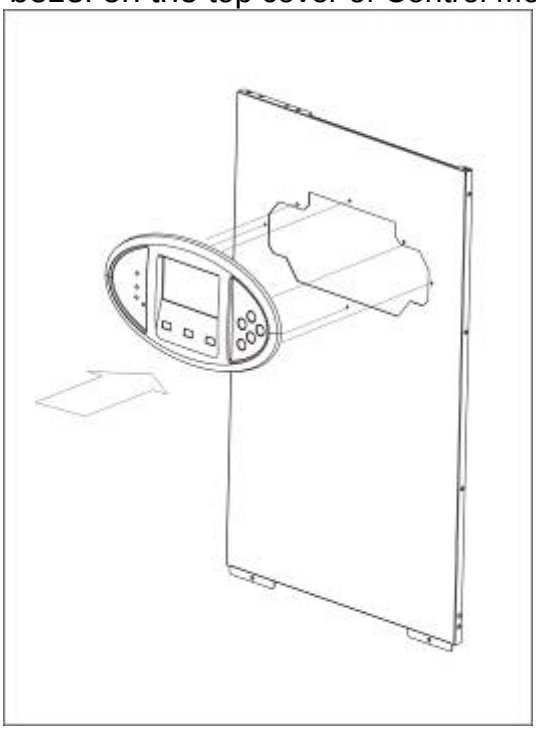

Step 3: Connect the cables to the control board on the bezel.

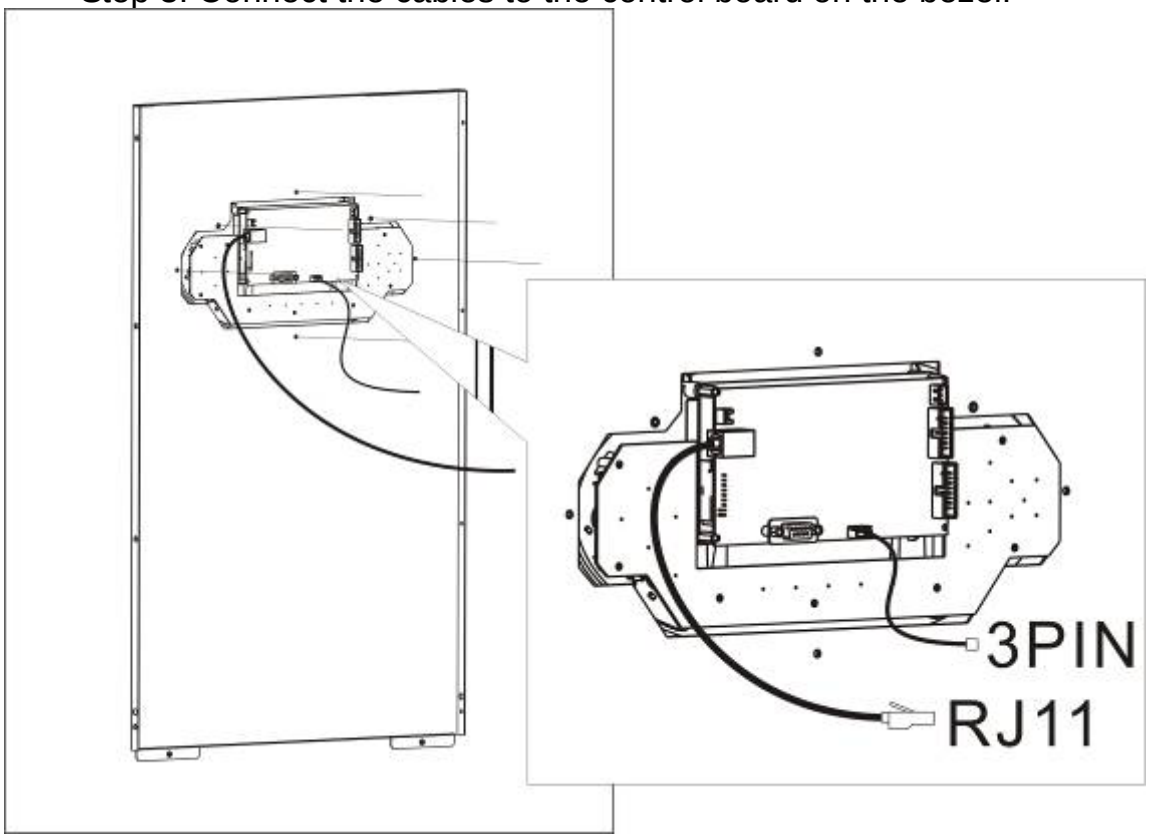

Step 4: Install the top cover to the Control Module with screws.

3-3-2-2. For One Control Module and One Power Module

Step 1: Install fixed supports at rear of Power Module.

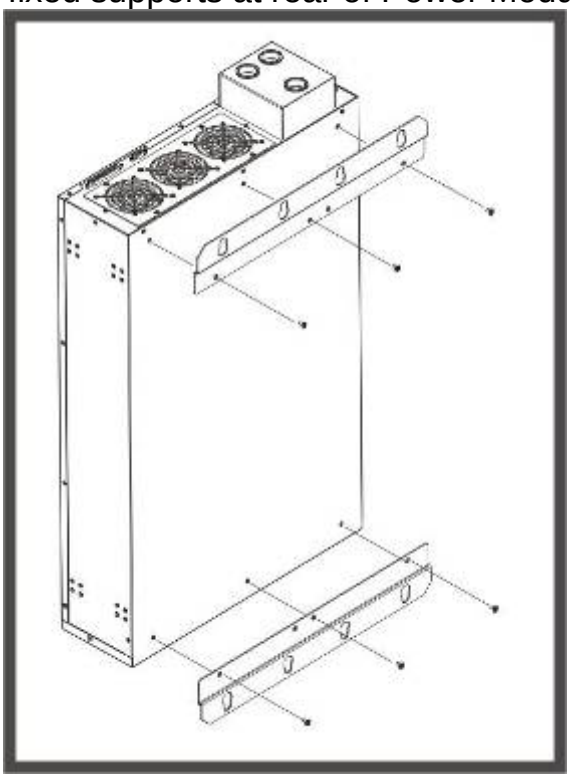

Step 2: Combine Control Module and Power Module.

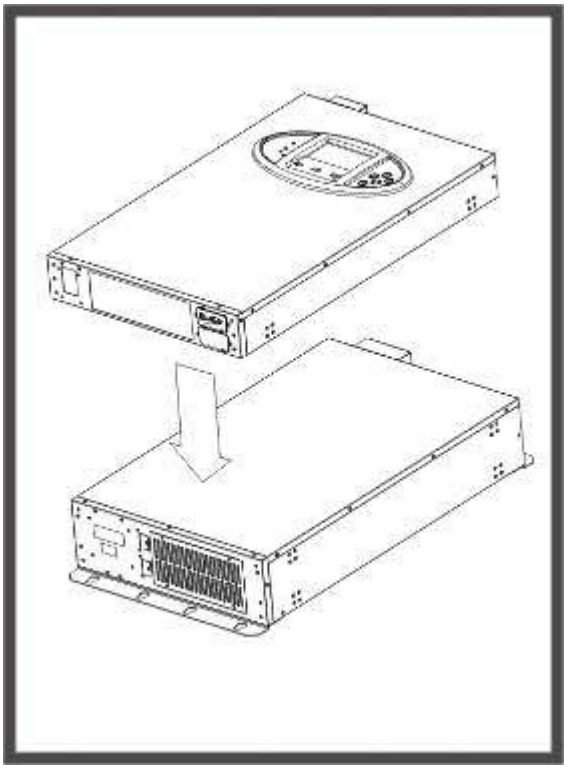

Step 3: Use fixed supports to fix Control Module and Power Module together.

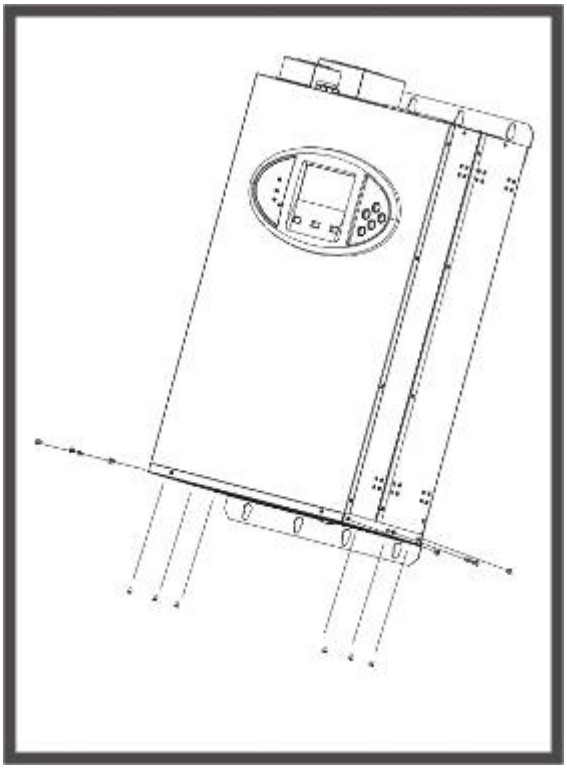

Step 4: Use Use fixed supports to fix Power Module and Control Module together.

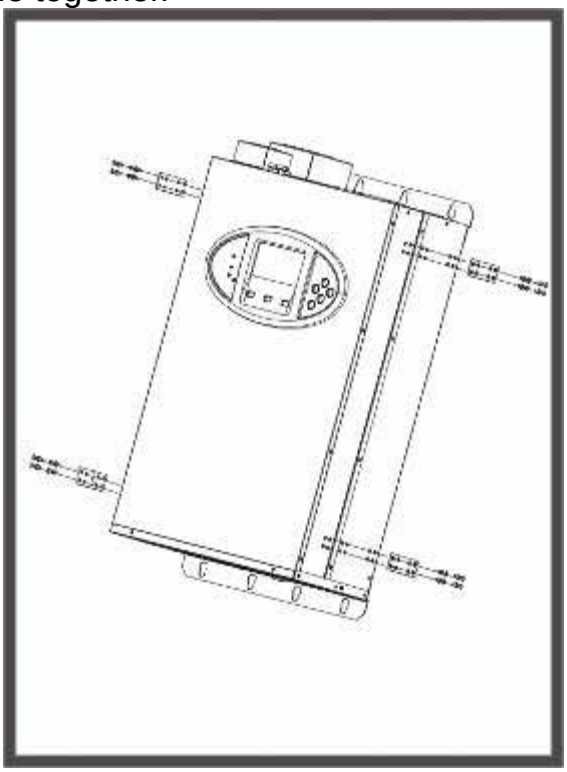

Step 5: Complete drawing.

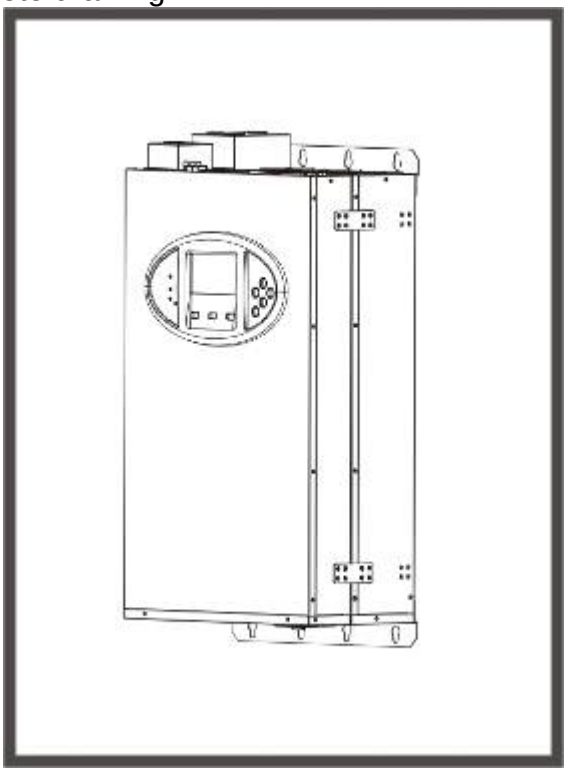

3-3-2-3. For two Power Module

Step 1: Install fixed supports at rear of Power Module.

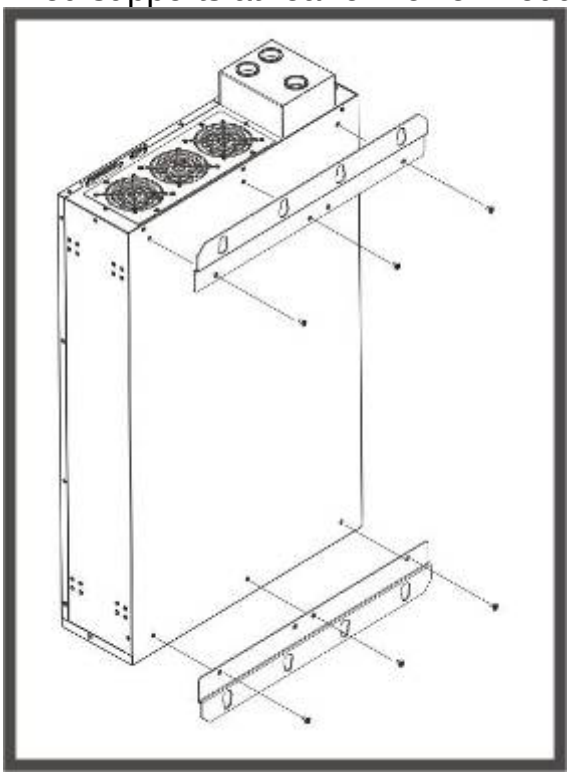

Step 2: Combine two Power Modules.

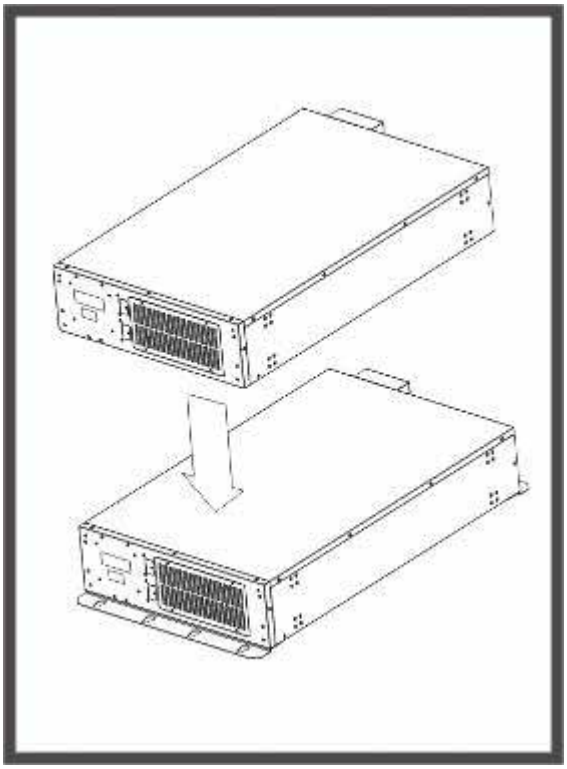

Step 3: Use fixed supports to fix two Power Modules together.

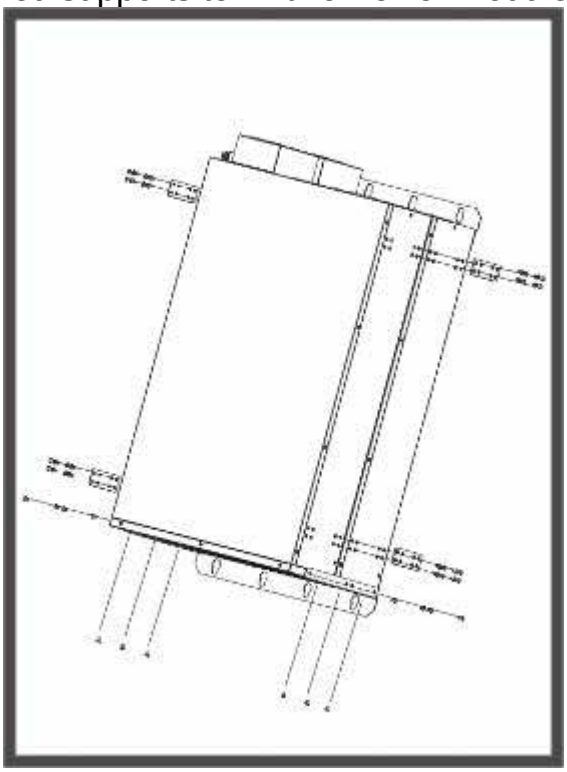

Step 4: Complete drawing.

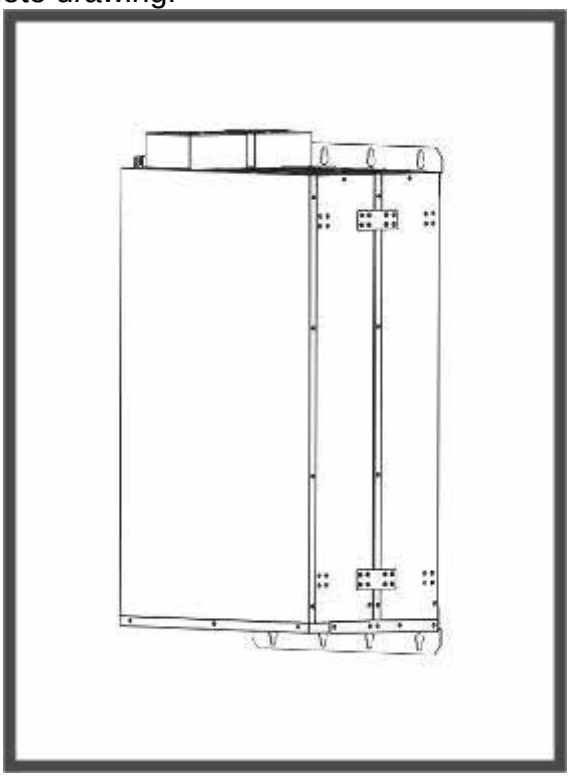

3-3-2-4. For one Control Module and two Power Module

Step 1 to 3: same as 3-3-2-3 For Two Power Modules

Step 4: Combine Control Module and Power Modules.

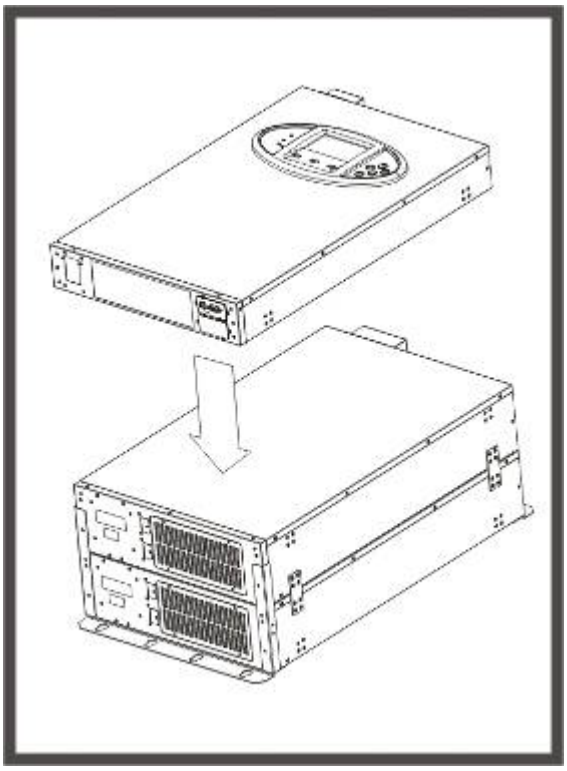

Step 5: Use Use fixed supports to fix Control Module and Power Modules together.

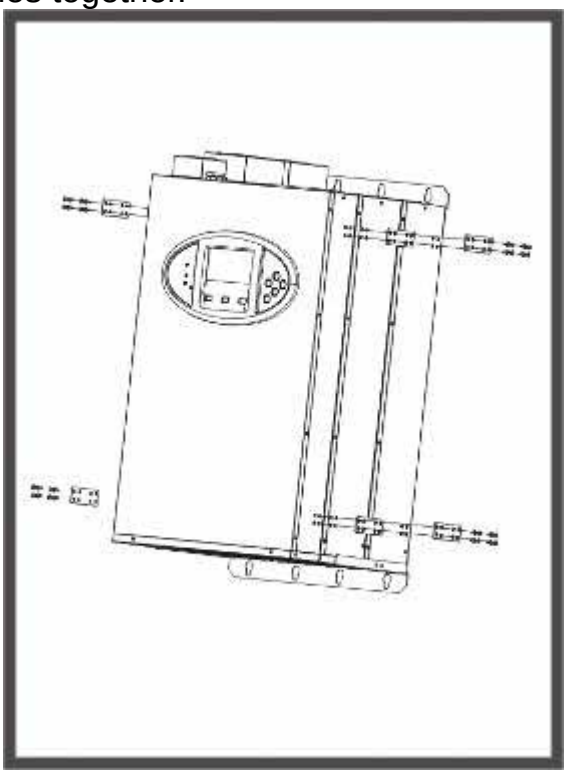

Step 6: Complete drawing.

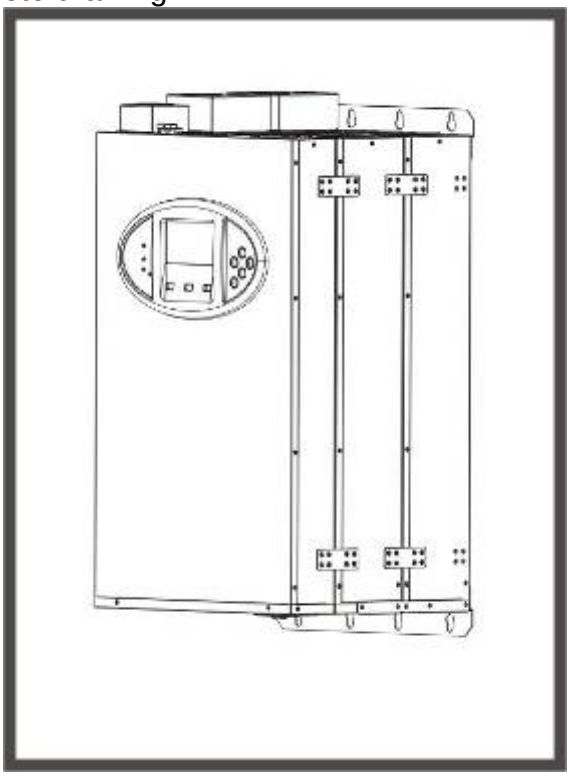

3-3-3. Floor Mount Installation

Step 1: Power Module Assembly

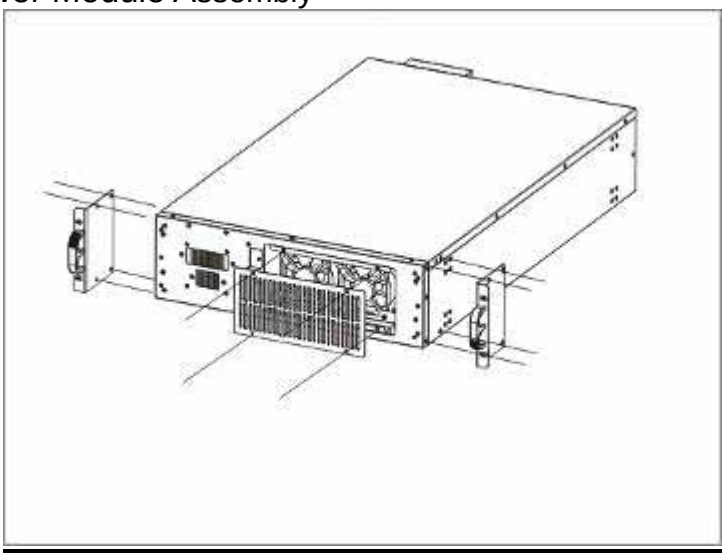

Step 2: Control Module Assembly

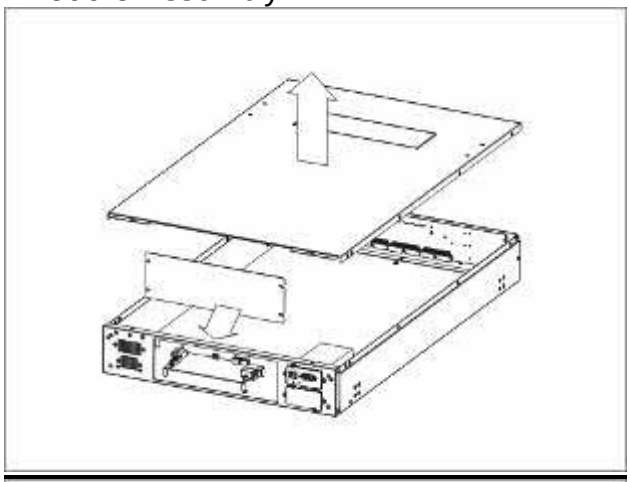

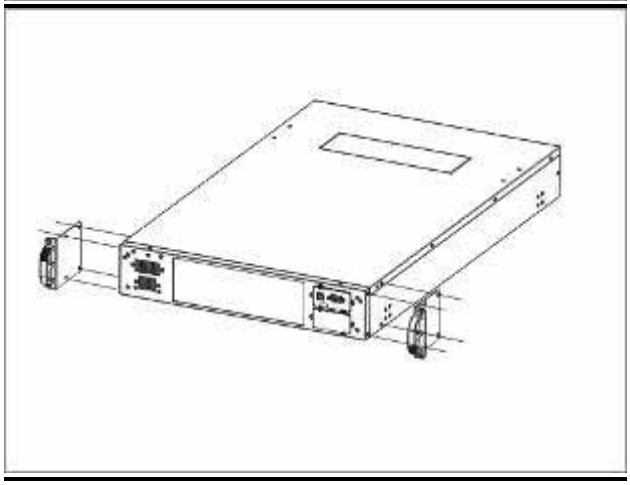

Step 3: Install Power Module to Floor Mount Panel

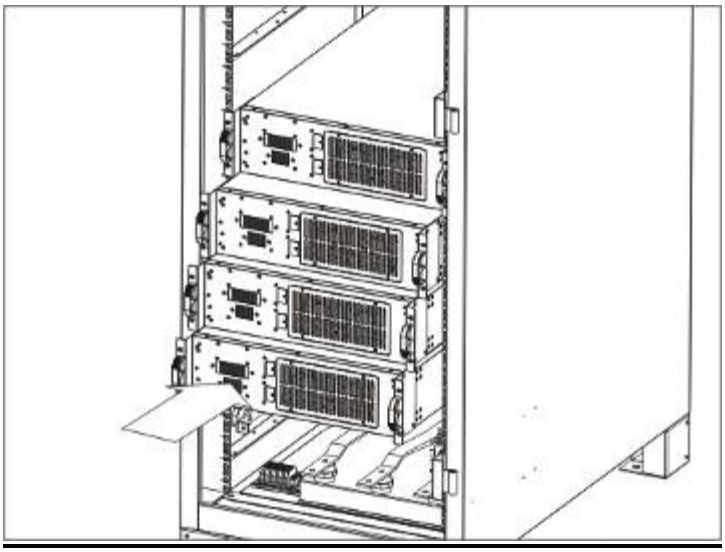

Step 4: Install Control Module to Floor Mount Panel

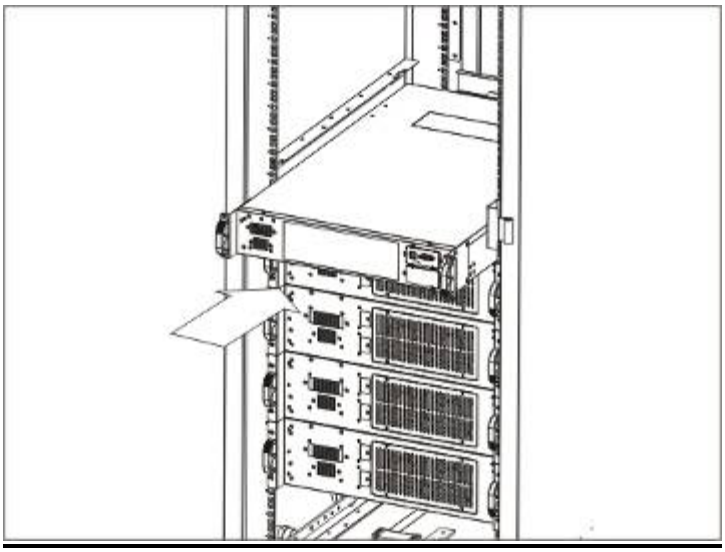

Step 5: Connect the power cables to copper bar

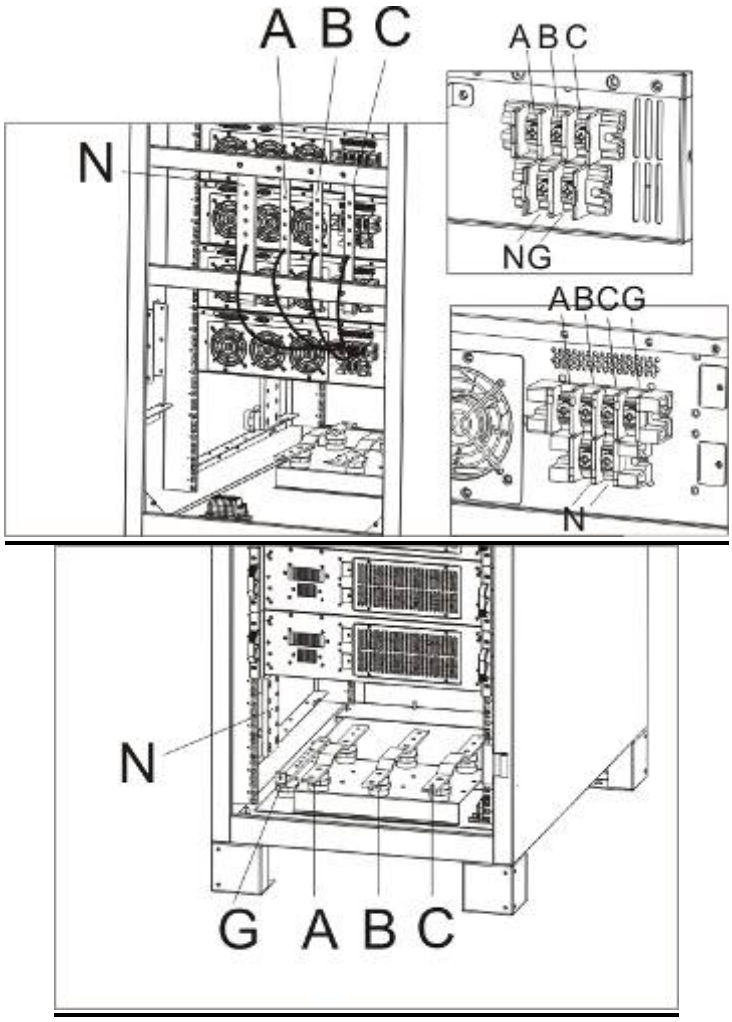

Step 6: Connect the cable between the bezel and control module/ Centralized Control Unit.

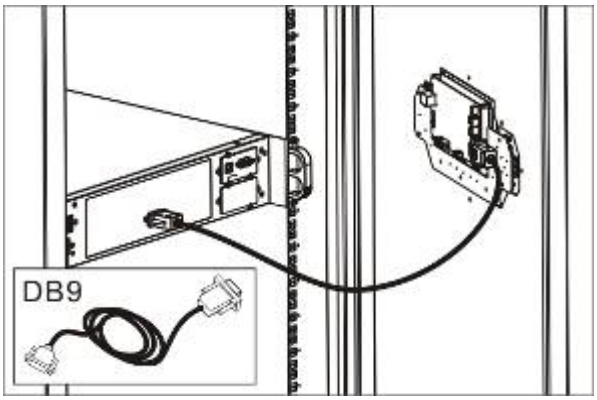

Step 7: Please follow below position to install all modules.

The Floor Mount Panel with bezel can be installed 2 Control Modules, 6 Power Modules and 1 Centralized Control Unit. The maximum capacity is up to 180A.

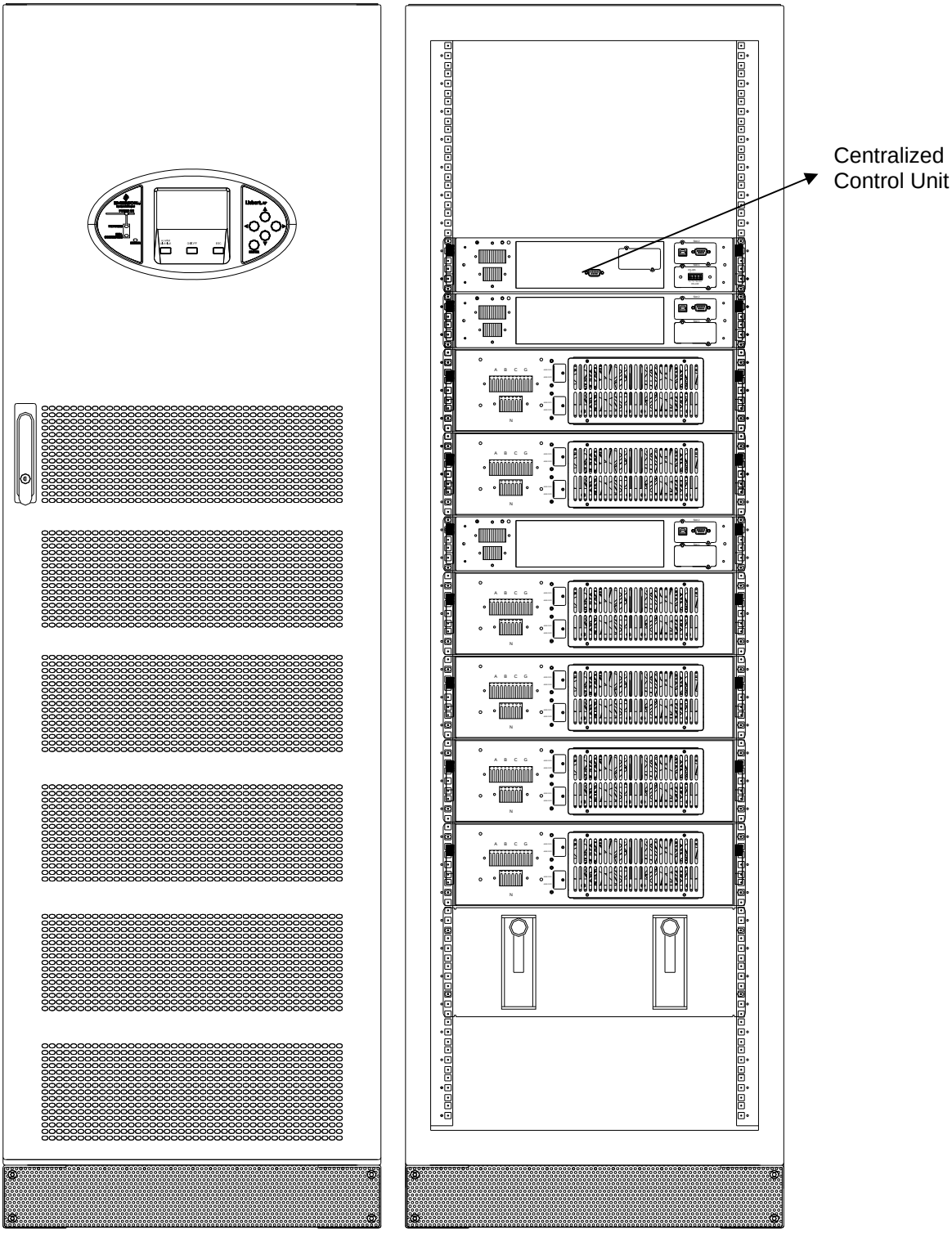

Step 8: Please follow below position to install all modules.

The Floor Mount Panel without bezel can be installed 2 Control Modules, 8 Power Modules. The maximum capacity is up to 240A.

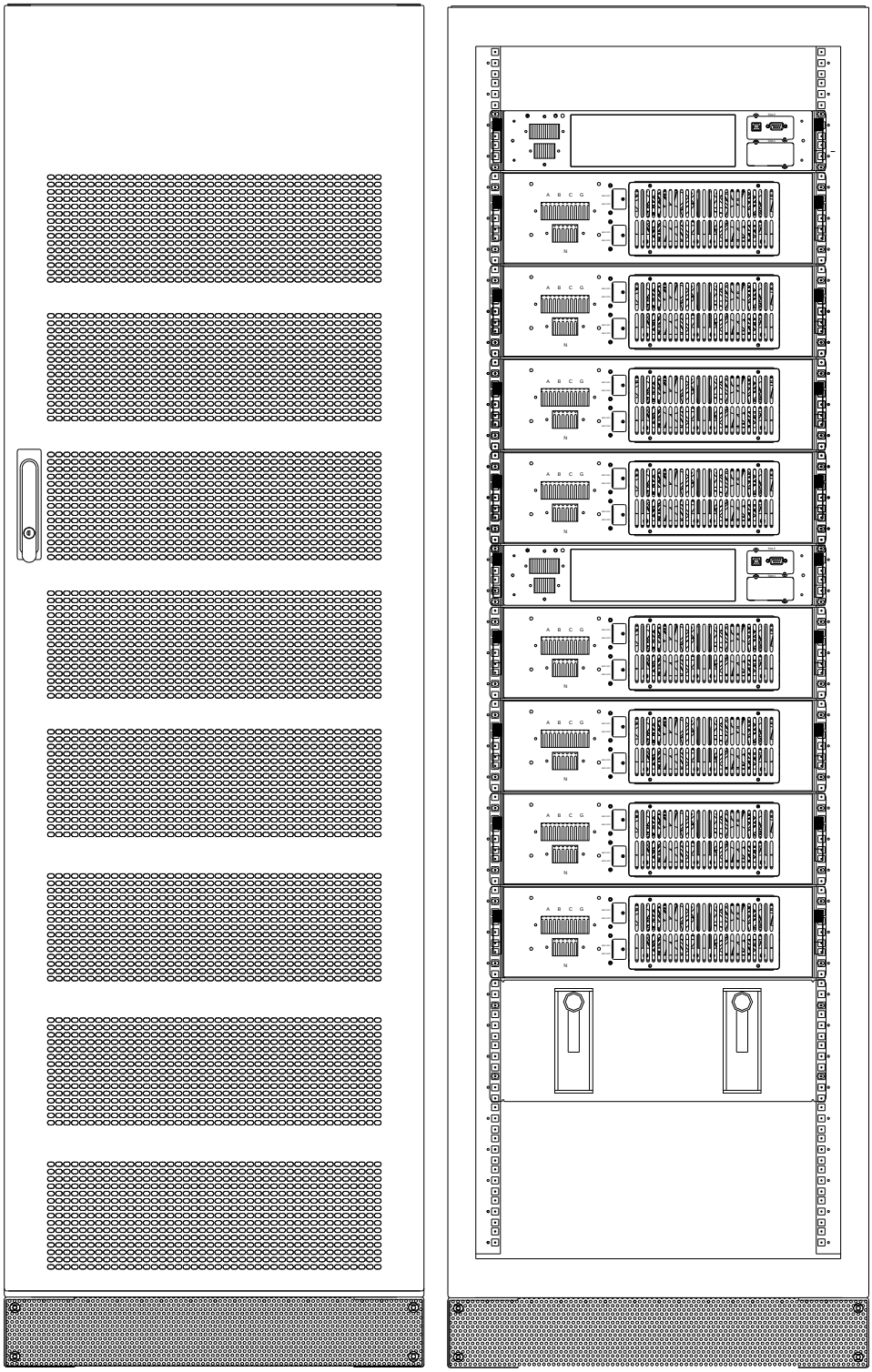

3–4. Wiring & Cables Explanation

Liebert AF2 is composed of the Control Module and the Power Modules, of which wire connections will be introduced and explained as below:

3-4-1. Wires connection for Control Module

The wires for the Control Module:

(1) 3 pcs power cables;
(2) 1 pcs Neutral cable(for 3 Phase 4 Wires system only);
(3) 1 pcs Ground cable;
(4) 4~6 pcs External CT wires connect to the External terminal block of the filter. When N Control Modules operate in parallel, 2N or 3N pcs additional wires are needed for connect between Control Modules;
(5) 3(N+1) pcs Parallel CT wires connect to the Parallel terminal block of the filter. (for N Control Modules operate in parallel);
(6) 1 pcs 9-pin control signal cable connects to the Master Power Module. This cable will be offered with the Control Module unit;
(7) N+1 pcs RJ11 parallel cables (for N Control Modules operate in parallel).

Liebert AF2 can be applied as 3 Phase 3 Wires or 3 Phase 4 Wires system. The External CTs can be installed either on Source side or Load Side as indicated in Drawing 3-1 and Drawing 3-2. For proper cabling position, please refer to Chapter 2-1-2.

The External CTs are recommended to install on Source side and 3 number of CT used for obtain best performance. If the external CTs have to install on Load side, please contact with local Emerson Network Power authorized service representative.

To avoid possibility of interference with the CT output signal, do not place power cables and the CT twisted paired signal cable in the same tray or conduit. If both power & signal cables need to be in the same tray or conduit, ensure proper partitions are in place to provide isolation between them.

The appropriate rating of Power Cables and Over-Current Protection Devices require to use in conjunction with **Liebert AF2**should adhere to local electrical regulations and the technical descriptions provided by the original equipment manufacturer. In addition, a minimum 10% over sizing to the Power Cables size and Over-Current Protection Devices is recommended, due to “skin effect” caused by the compensating harmonics generated by **Liebert AF2**.

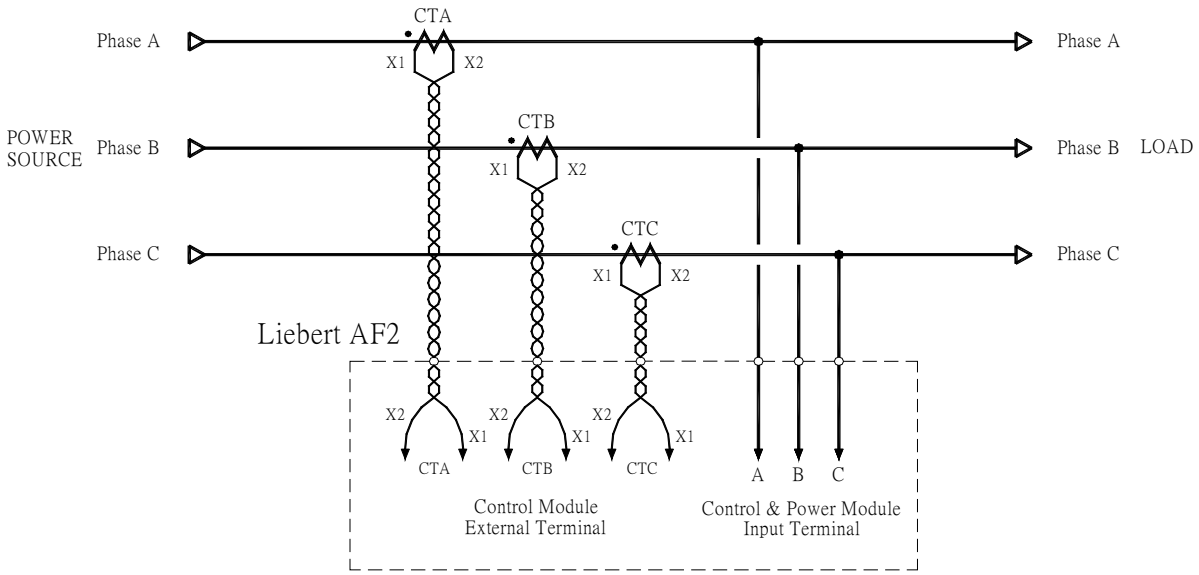

Drawing 3-1 External CTs Installed at Source Side

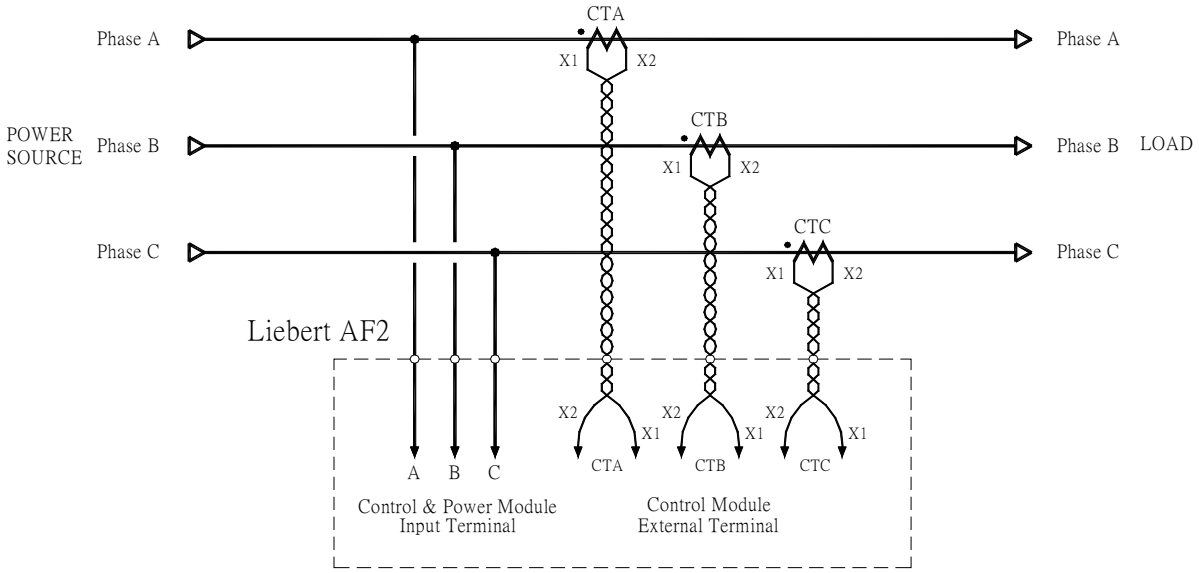

Drawing 3-2 External CTs Installed at Load Side

When the Control Modules are installed in parallel, the RJ11 cable shall be connected according to Chapter 2-1-2. In additional, the wiring of the External CTs is different from the standalone unit. Each CT's output signals shall be connected to the external terminal block of the Control Modules in serial as shown in Drawing 3-3.

There are 3 number of Parallel CT have to install at total output of *Liebert AF2* modules, when Control Modules operate in parallel. Please refer to Drawing 3-4 for Parallel CT connection. The acceptable Parallel CTs ratio are 500/1A, 1000/1A, 1500/1A and 2000/1A.

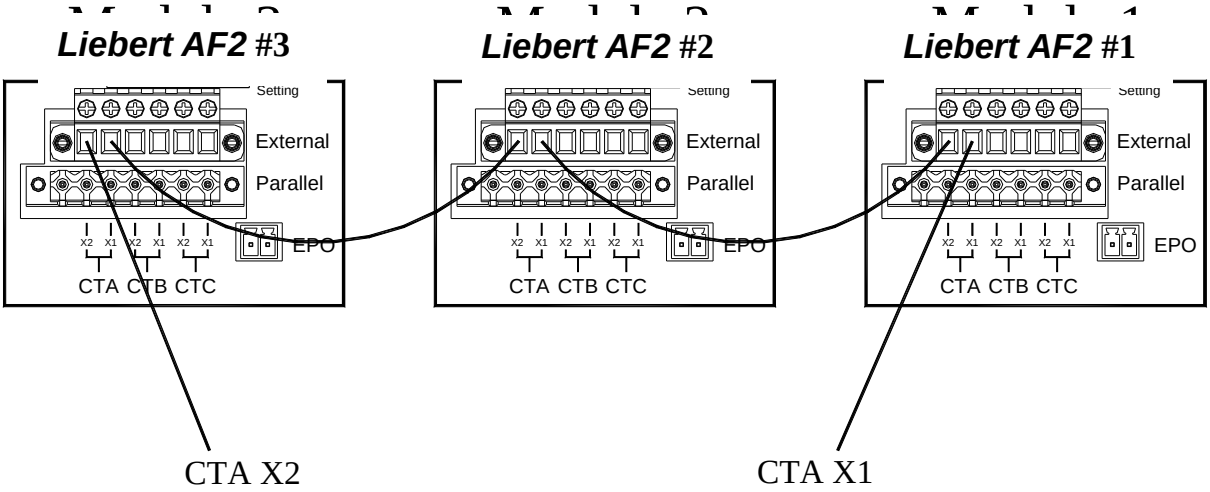

Drawing 3-3 External CT connection for Control Modules operate in parallel

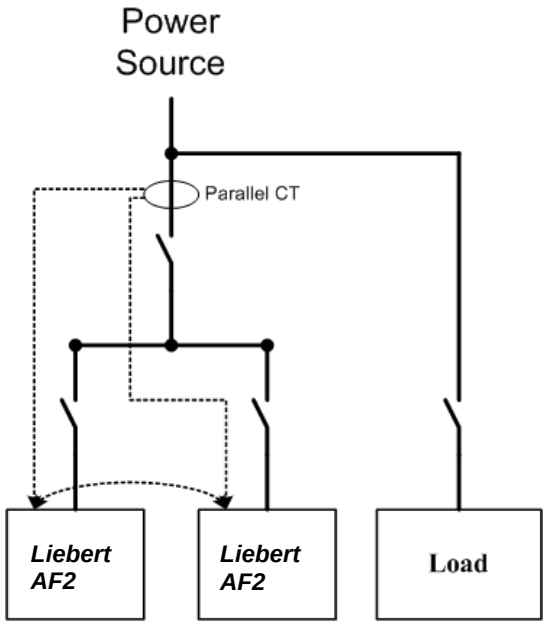

(a)

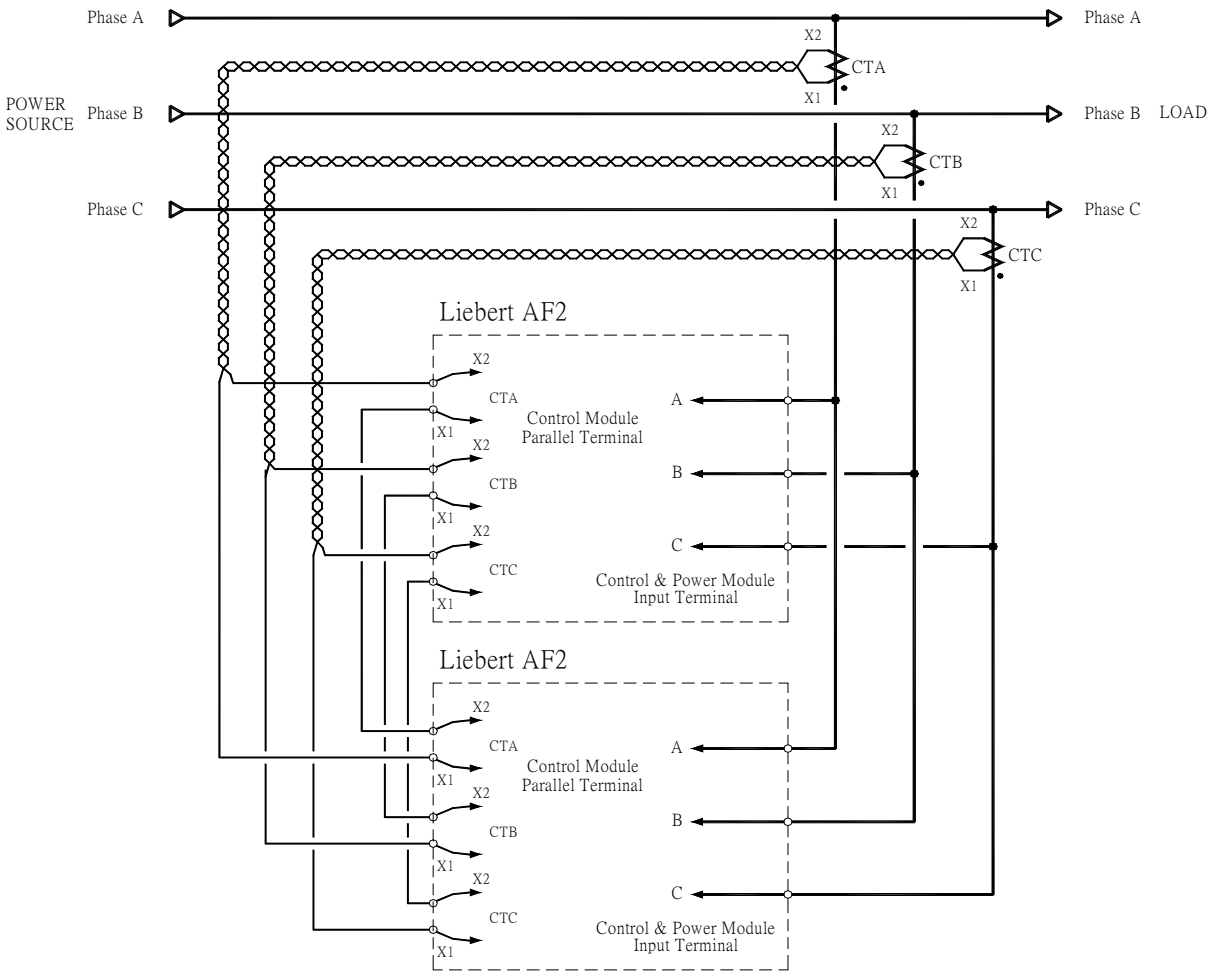

(b)

Drawing 3-4 Parallel CT installation and connection

3-4-2. Wiring connection for Power Modules

The wires/cables for the Power Modules:

(1) 3 pcs Power Cables;

(2) 1 pcs Neutral Cable(for 3 Phase 4 Wires System only);

(3) 1 pcs Ground Cable;

(4) 1 pcs DC bus cable for connect to another Power Module. This cable is offered with the Power Module unit;

(5) 1 pcs 37pin control signal cable connects to the Control Module. This cable is offered with the Power Module unit.

When several Power Modules are connected, the cables (from item 1 to item 3) for each Power Module shall be connected to the Distribution switchbox respectively as Drawing 3-5(a).

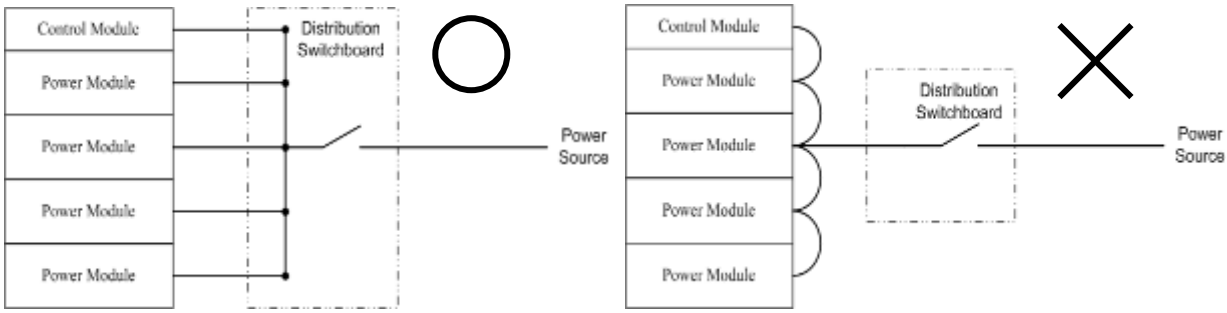

(a) Correct Connection **(B) Incorrect Connection**

Drawing 3-5 Cables connection for Power Modules

The Control Module can control and monitor up to 4 Power Modules. When more than 1 pcs Power Modules are connected, in order to make sure that the DC Bus voltage of each Power Module is the same, each DC Bus of the Power Modules shall be connected in parallel. If the DC Bus of the Power Modules is not connected properly, the DC Bus will be abnormal which may affect the operation of the Power Modules. In worse case the Power Modules might be damaged. Regarding the connection of the DC Bus, please refer to Chapter 2-2-1.

3–5. Wiring/Cabling Position and Its Specification

3-5-1. Control Module and Power Module Wirings

	Items	Recommended Minimum Cables Size	Terminal Block Specification	Recommended Maximum Length
Control Module	Power Cables A, B, C	20AWG/0.5mm^2	Fastening with screw, M4	20 meters
	Neutral Cable	20AWG/0.5mm^2	Fastening with screw, M4	20 meters
	CT Signal Wires	20AWG/0.5mm^2	Crimping , maximum 4mm^2	30 meters
	Dry Contact Wires	24AWG/0.2mm^2	Crimping , maximum 4mm^2	30 meters
	EPO Signal Wire	24AWG/0.2mm^2	Crimping , maximum 1.5mm^2	30 meters
Power Module	Power Cables A, B, C	8AWG/6mm^2	Fastening with screw, M6	20 meters
	Neutral Cable * 2	8AWG/8.4mm^2	Fastening with screw, M6	20 meters

The Wires connections for Control Module and Power Module are as Drawing 3-6.

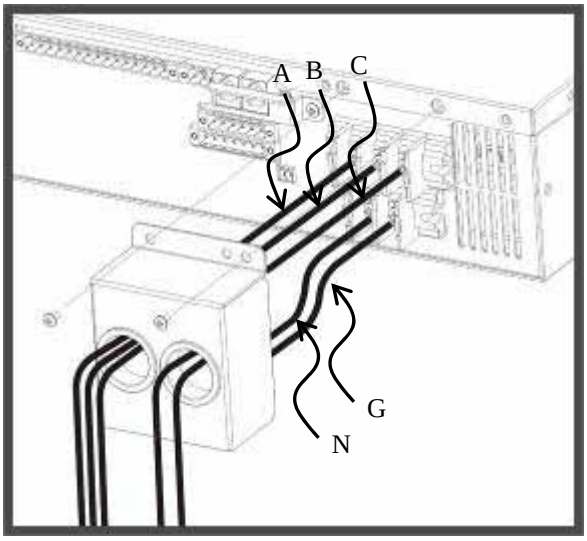

(a) Control Module

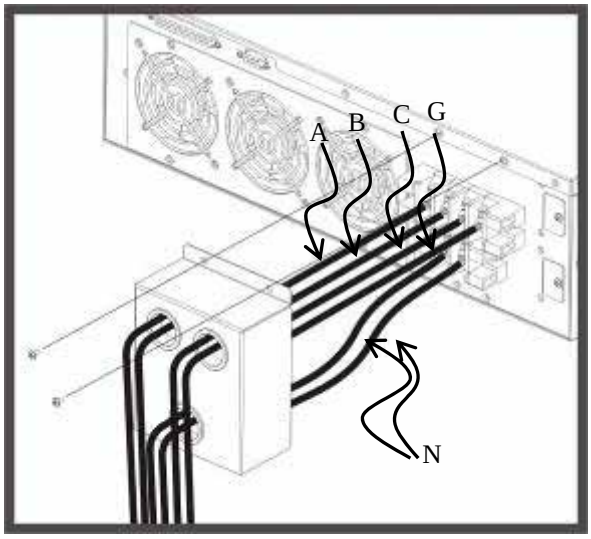

(b) Power Module

Drawing 3-6 Control Module and Power Module Wires Connection

3-5-2. Floor Mount Panel Wirings

Items	Type of terminations
L1, L2, L3	Copper bar, M8 screw x 2
Neutral Phase	Copper bar, M10 screw x 4
Grounding	Copper bar, M6 screw x 3

The Wires connections for floor mount panel are as Drawing 3-7.

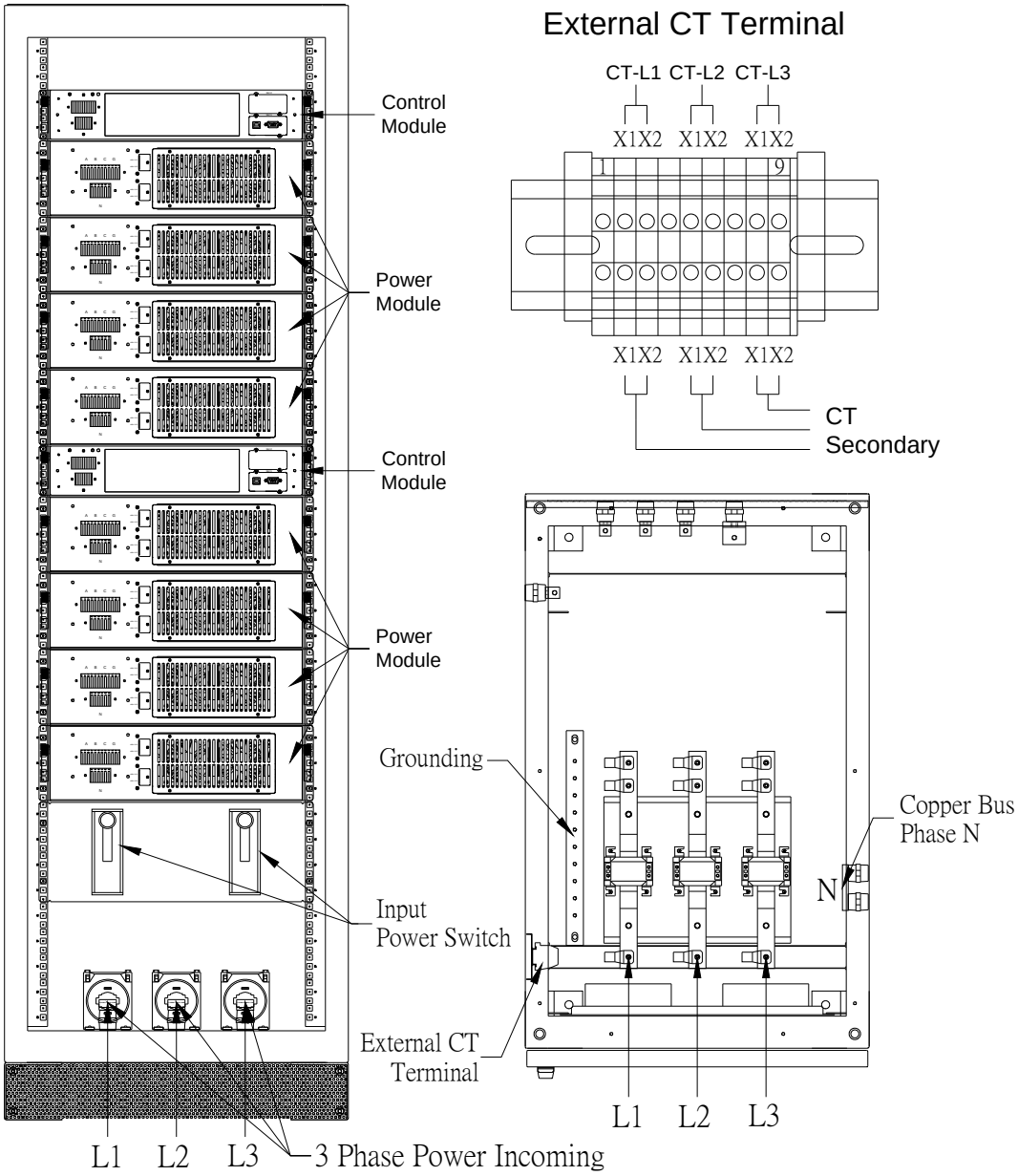

Drawing 3-7 Floor Mount Panel Wiring Position

3–6. Outlook Dimension

Drawing 3-8 to Drawing 3-14 are the outer dimension for **Liebert AF2**.

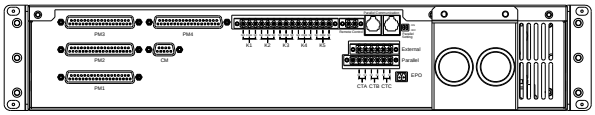

Rear View

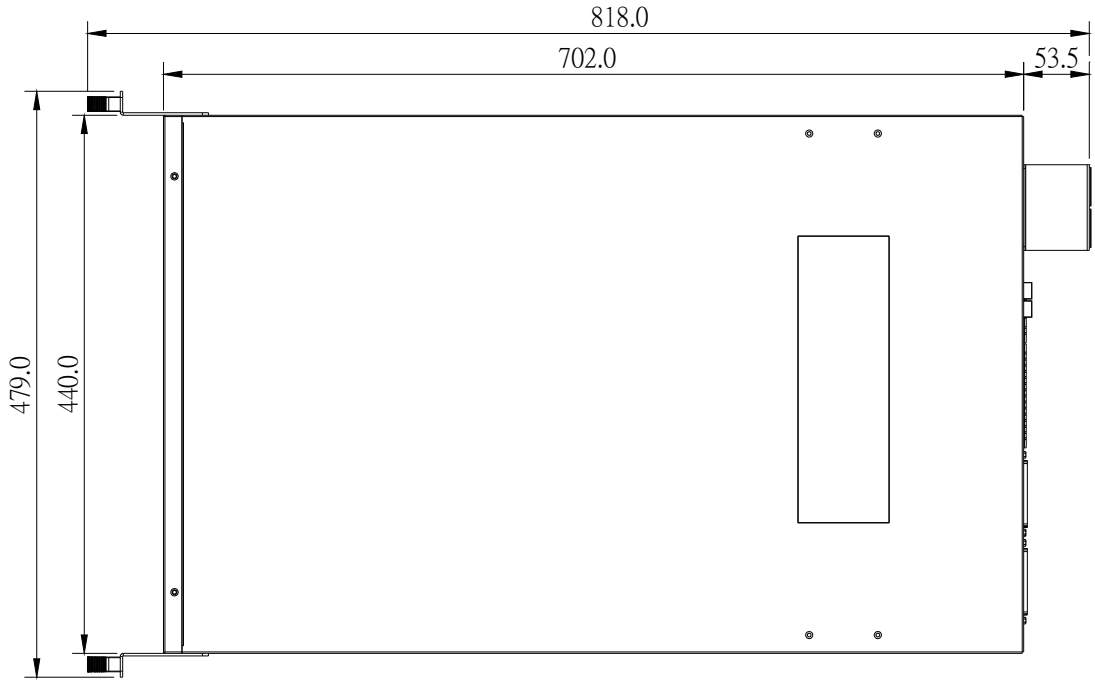

Top View

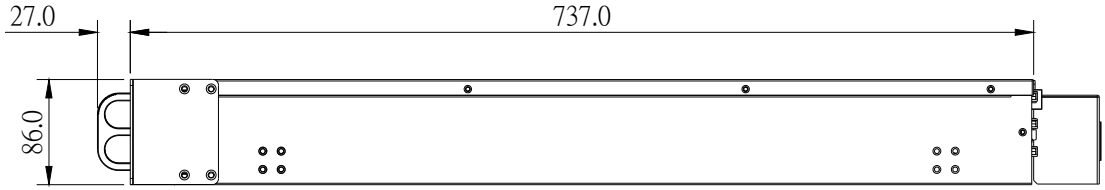

Right View

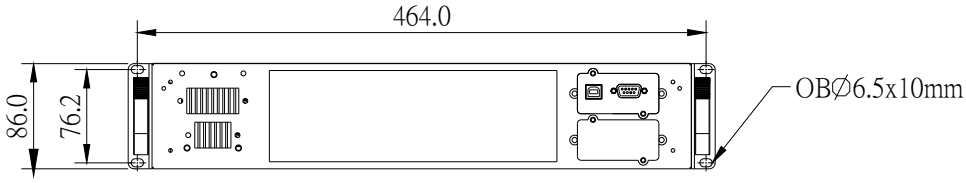

Front View

Drawing 3-8 Rack Mount Control Module Outlook

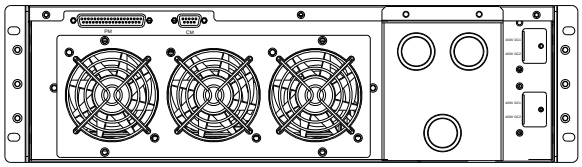

Rear View

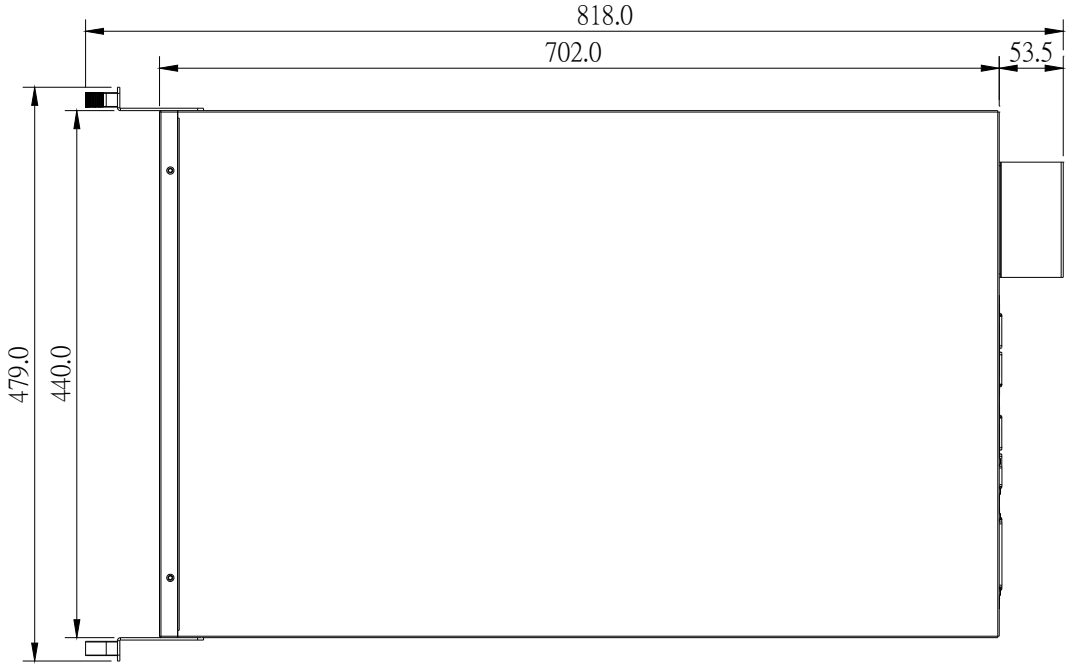

Top View

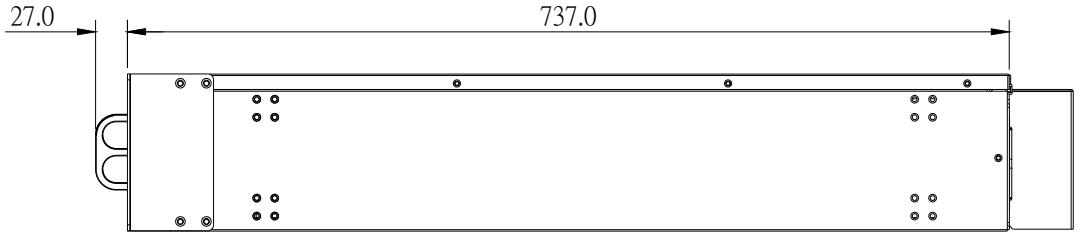

Right View

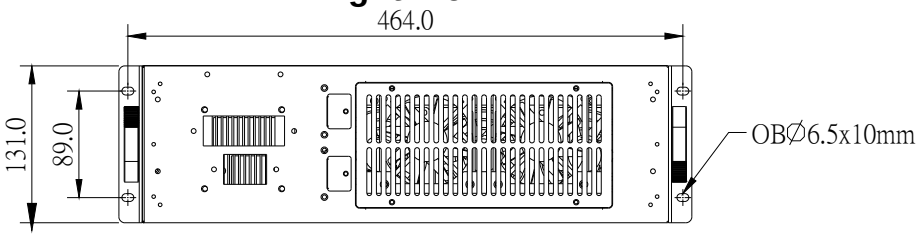

Front View

Drawing 3-9 Rack Mount Power Module Outlook

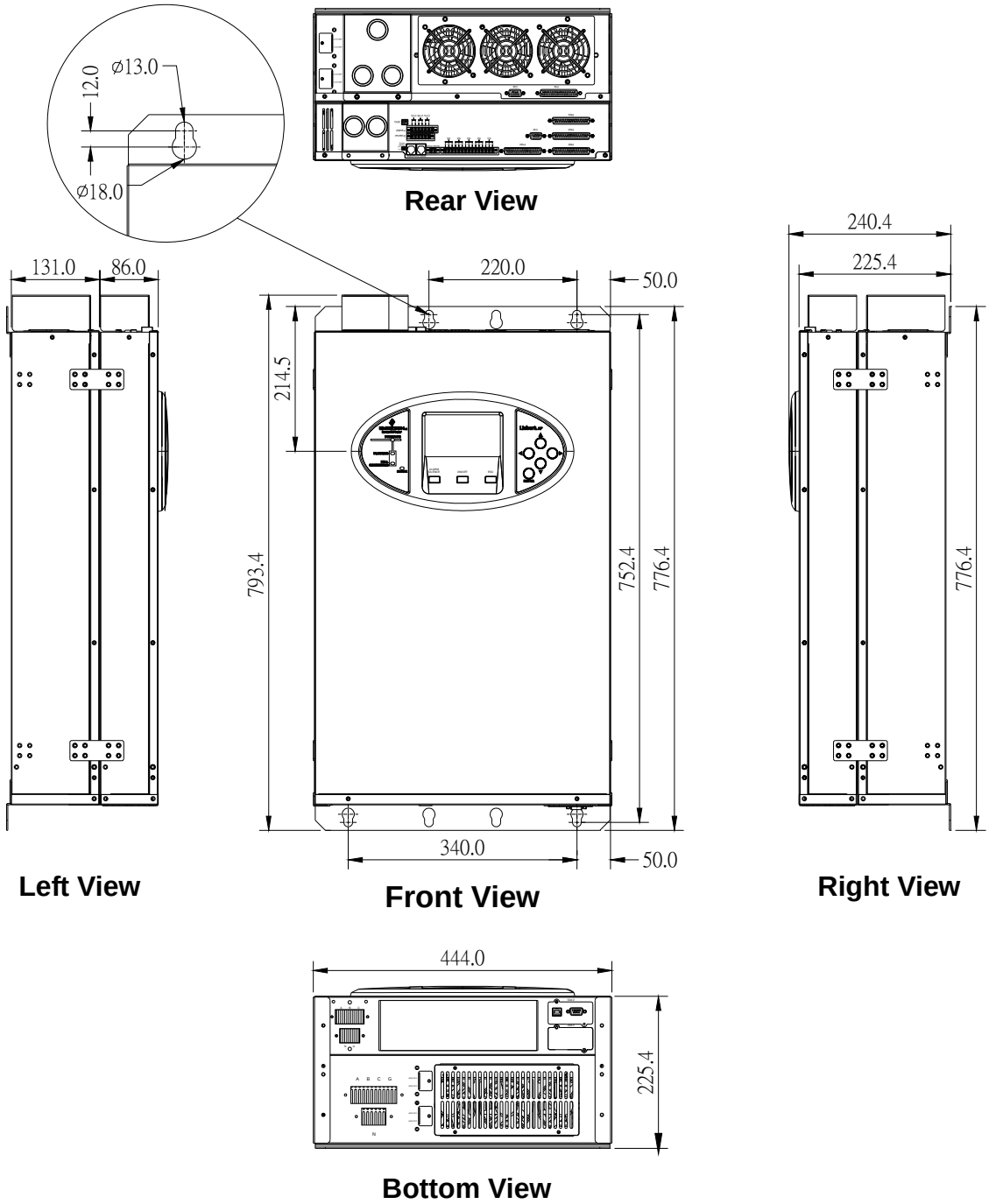

Drawing 3-10 Wall Mount Outlook (One Control Module + One Power Module)

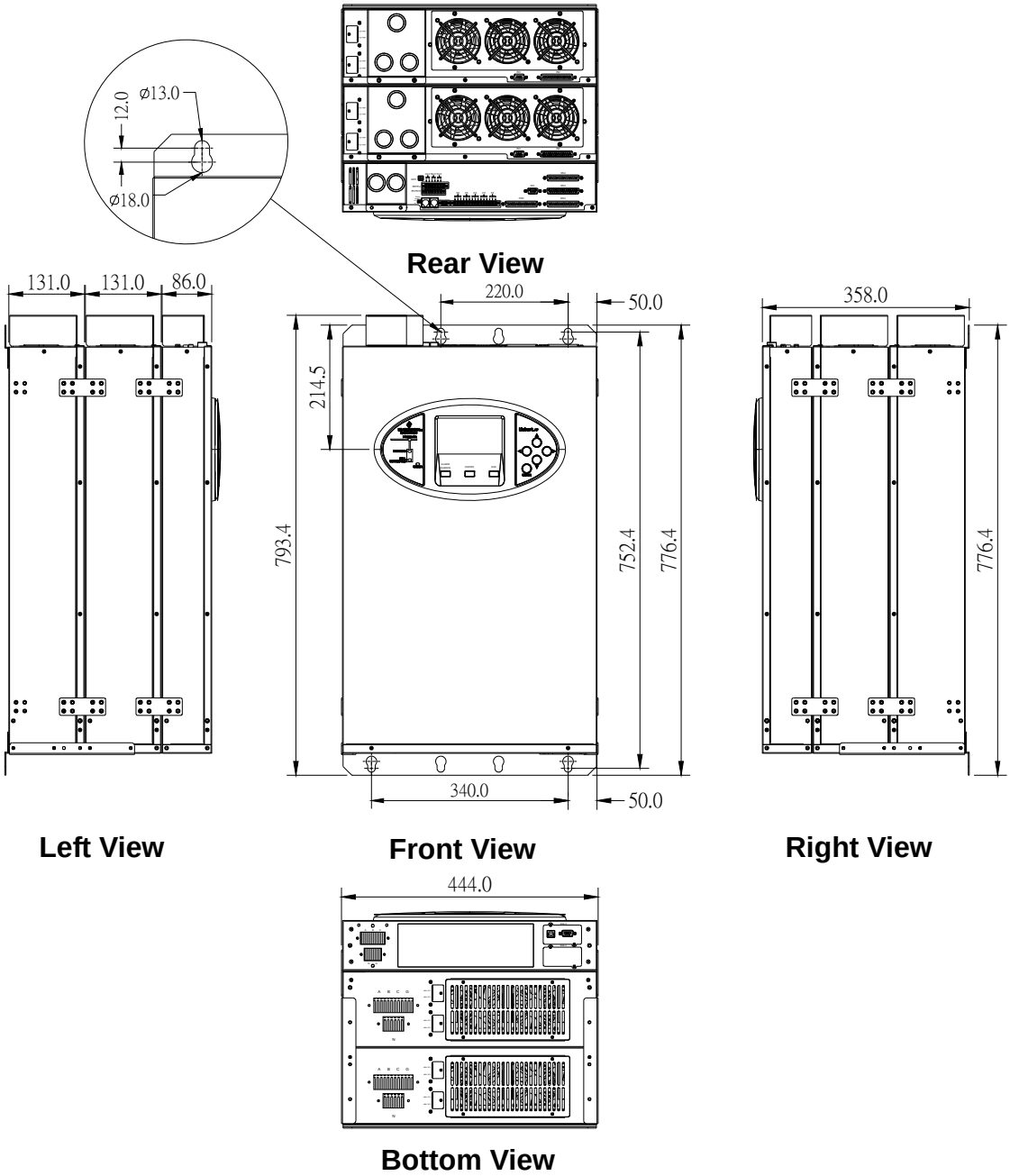

Drawing 3-11 Wall Mount Outlook (One Control Module + Two Power Modules)

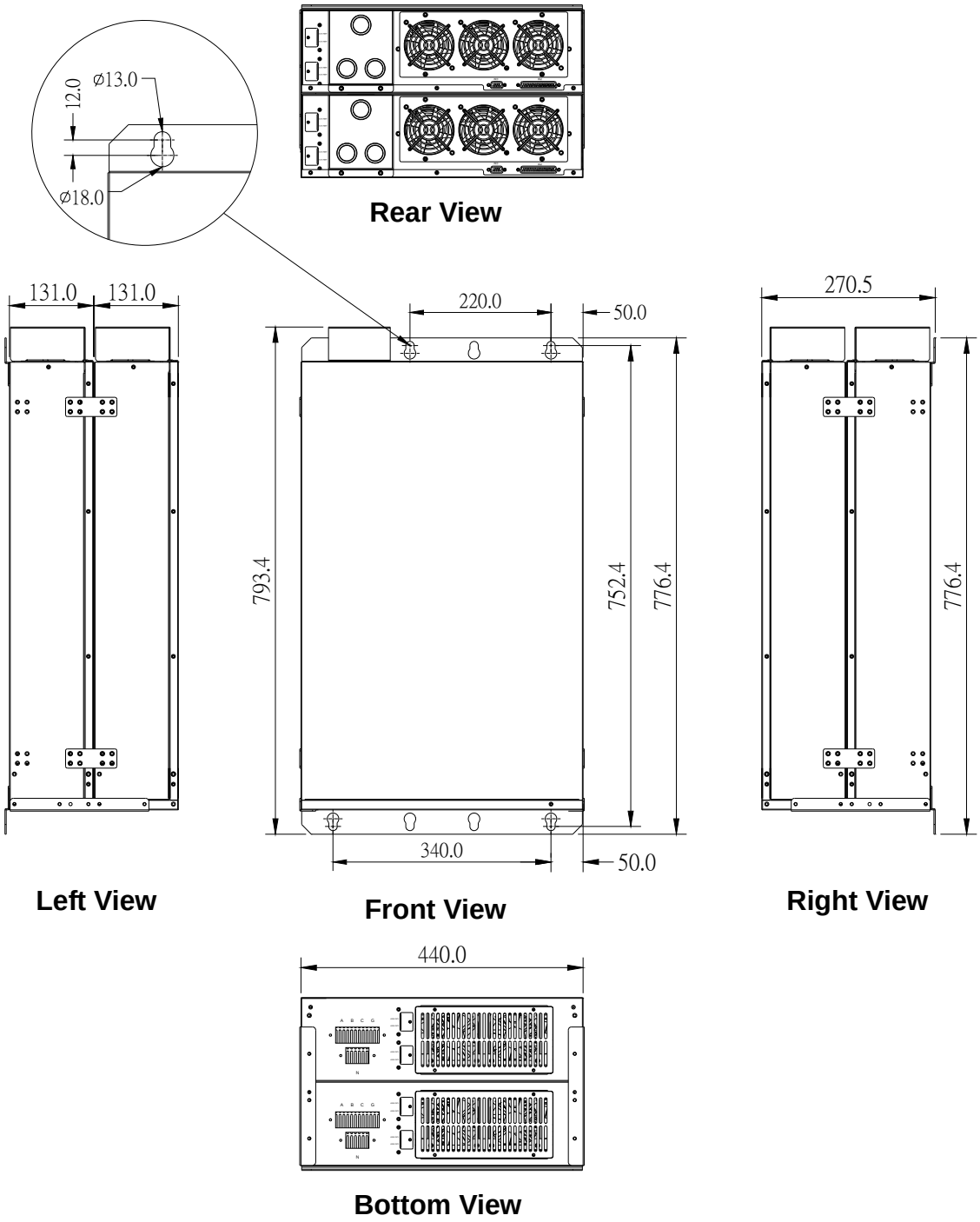

Drawing 3-12 Wall Mount Outlook (Two Power Modules)

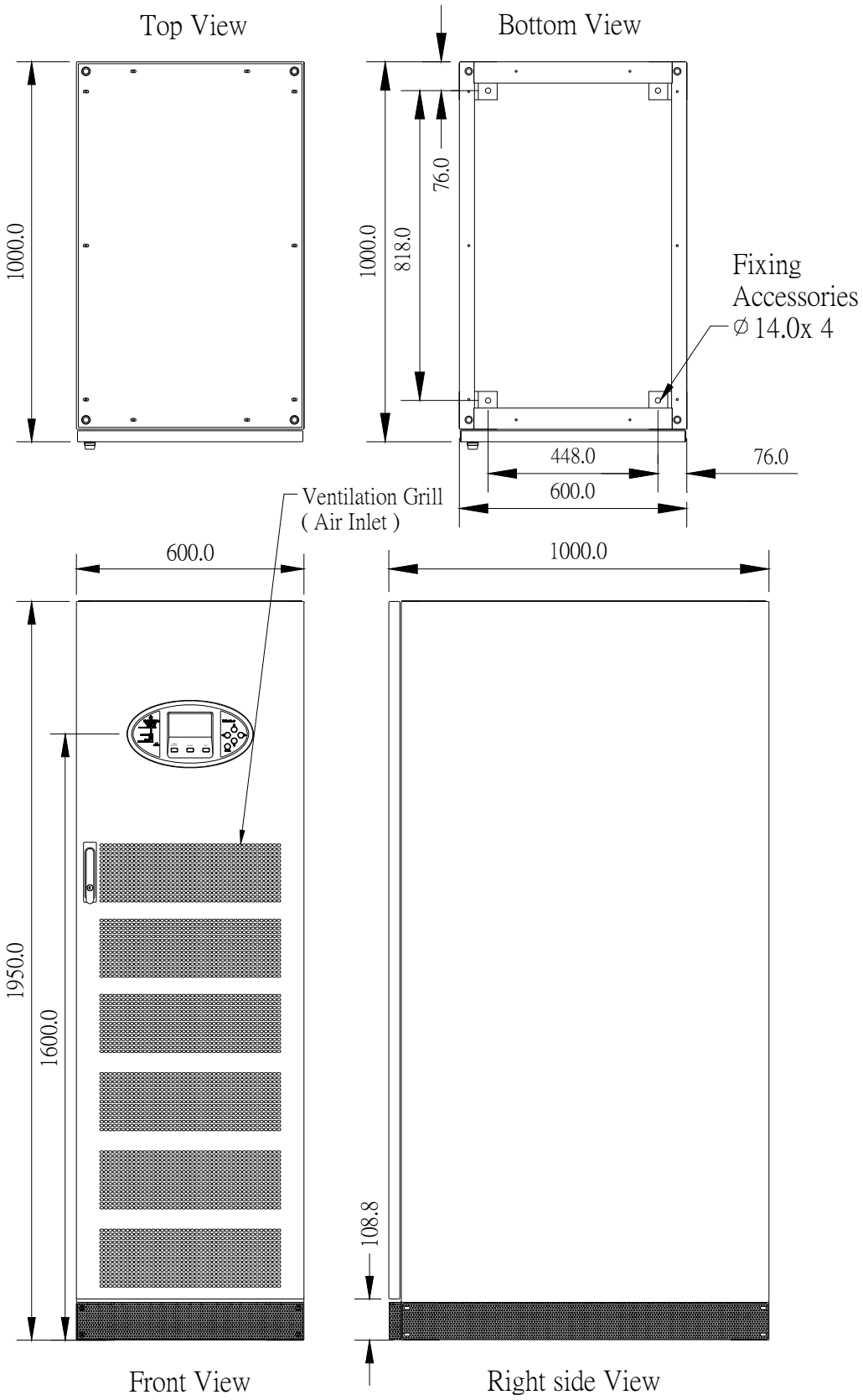

Drawing 3-13 Floor Mount Panel with bezel Outlook

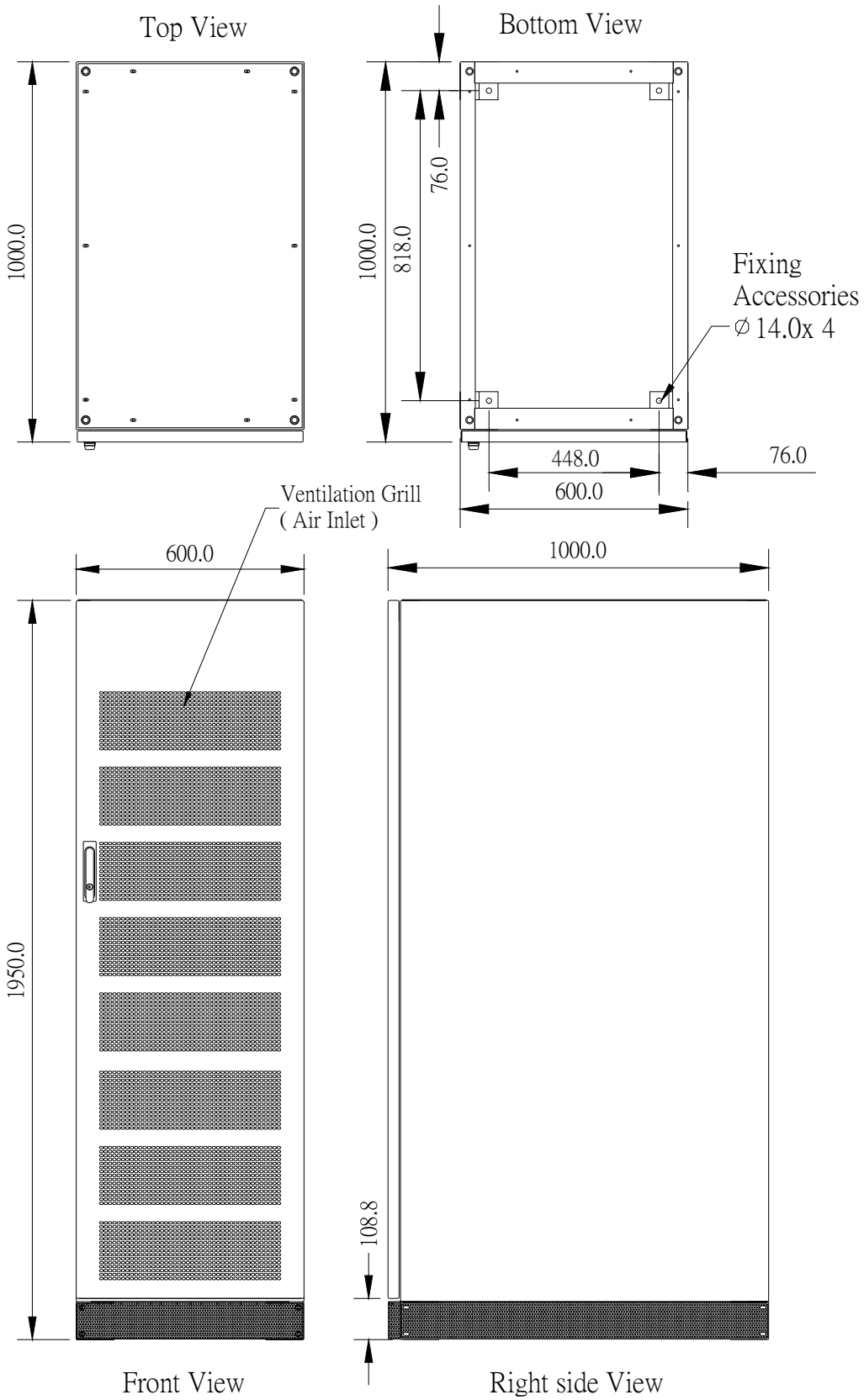

Drawing 3-14 Floor Mount Panel without bezel Outlook

4. LCD Control Panel Function Explanation

Drawing 4-1 indicate the block diagram of the function provided by the LCD control panel.

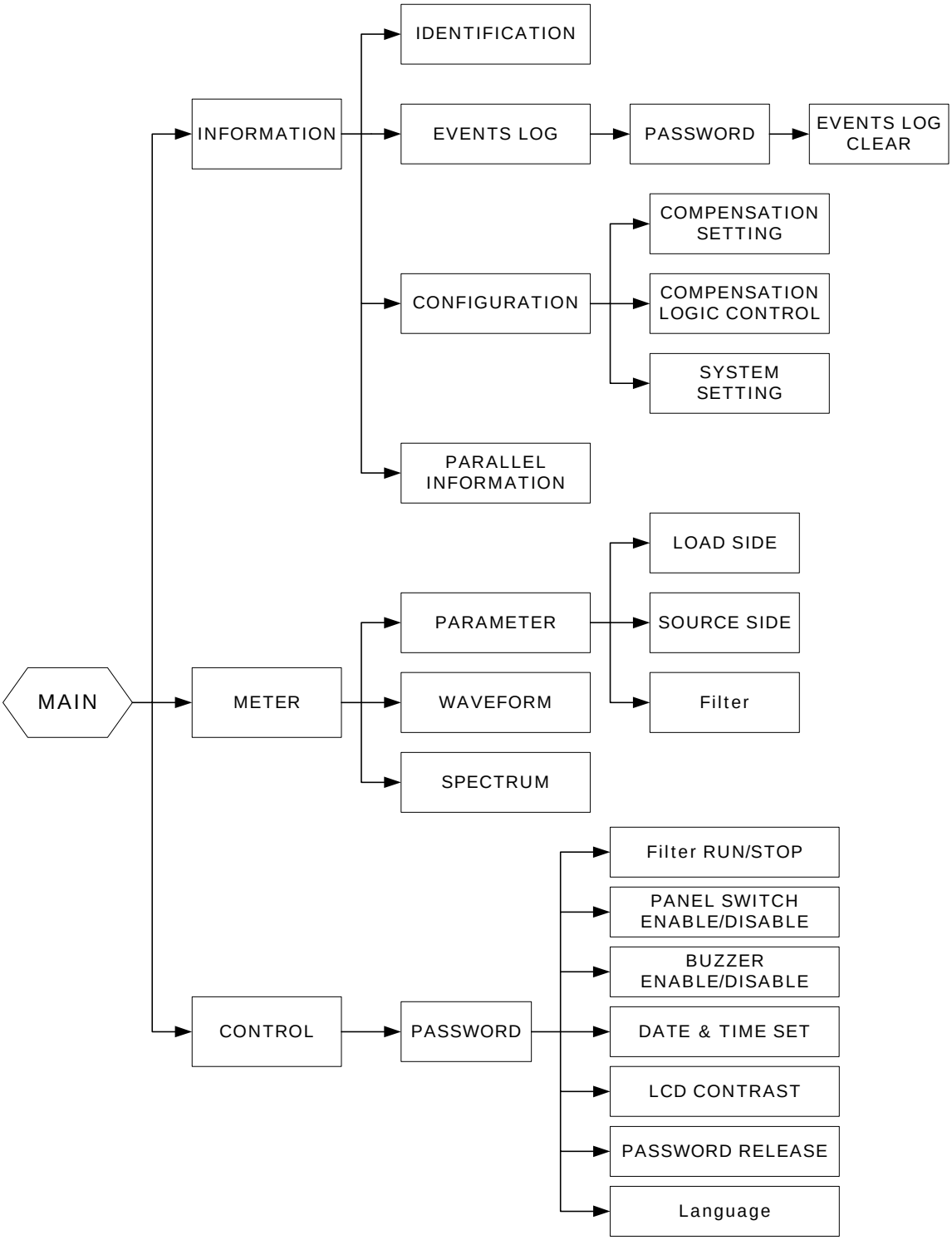

Drawing 4-1 LCD Control Panel Function Block

4–1. Main Screen Function Explanation

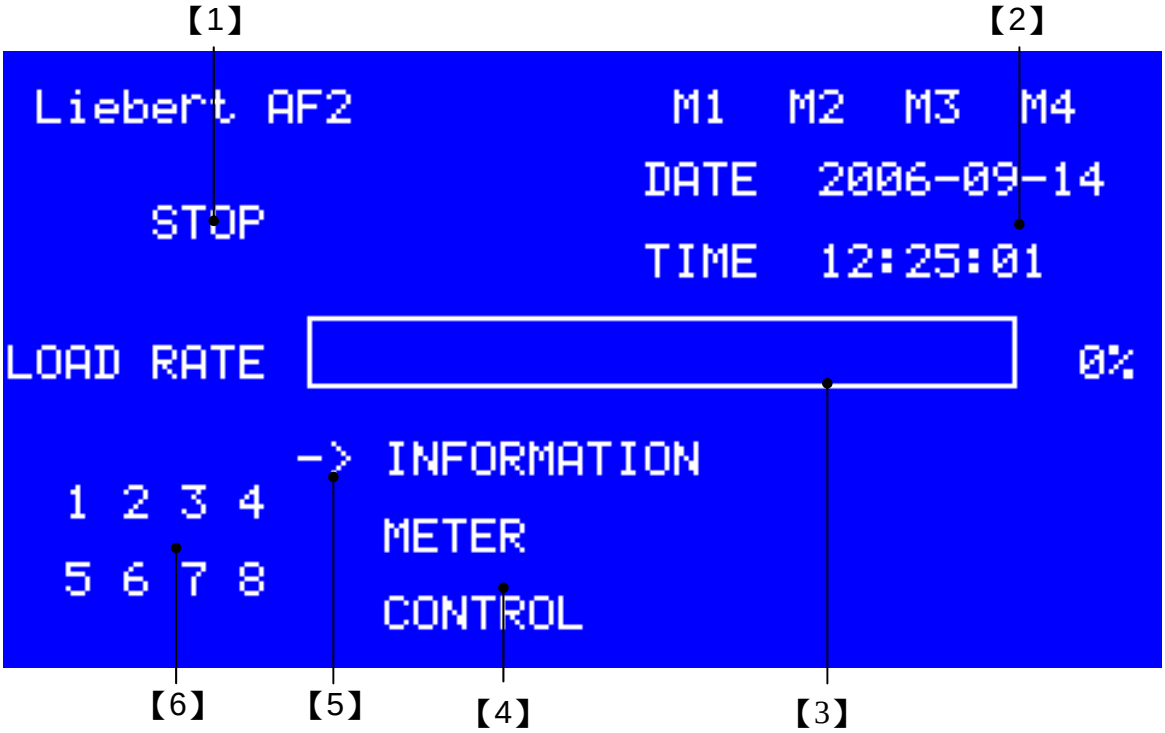

【1】 The operation status of the filter.
”RUNNING >>>>“
“STOP”

【2】 Power Module status
M1/M2/M3/M4 Display: Power Module is connected with Control Module.
M1/M2/M3/M4 Blinking: Power Module abnormal.
M1/M2/M3/M4 Hide: Power Module is not connected.

【3】 Current date and time

【4】 Percentage of compensation capacity

【5】 Main Menu

【6】 Cursor：Use ▼ ▲ keys to move the cursor

【7】 Control Module Parallel Status
1/2/3/4/5/6/7/8 Display: The specify Control Module has communicated with other Control Module.
1/2/3/4/5/6/7/8 Hide: The specify Control Module is disconnected.

4–2. INFORMATION

4-2-1. IDENTIFICATION

1) In the Main screen, move the cursor to the **INFORMATION** by using ▼ ▲ keys and then press ↵ key to enter into the **INFORMATION** page.

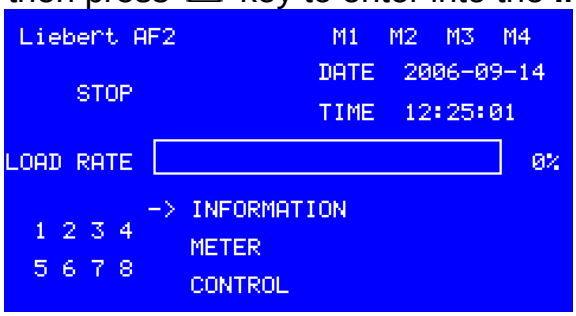

2) Move the cursor by using ▼ ▲ keys to the **INDENTIFICATION** and then press ↵ key to enter into the **IDENTIFICATION** page.

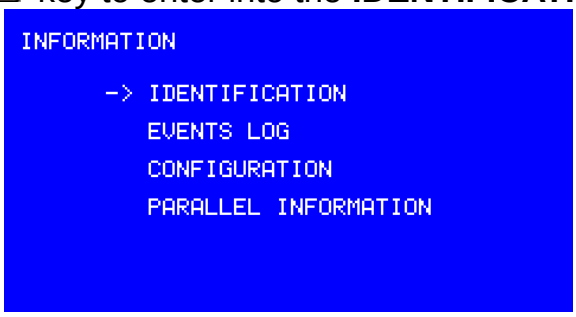

3) You may get all factory data set in the filter.

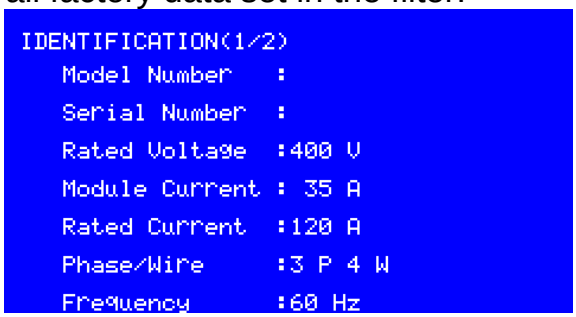

4) Use ▼ ▲ keys to change to another page.

```
IDENTIFICATION(2/2)
   CPU1 Controller Ver.      :1.01
   CPU2 Controller Ver.      :1.01
   LCD Panel Program Ver.    :2.01
   ID                        :  1
   Number of Parallel Unit   :  1
   Parallel Number           :  1
```

Model Number : Model Number of Control Module

Serial Number :

Rated Voltage : The voltage rating of this filter.

Module Current : Current rating of each Power Module

Rated Current : Total current rating of this filter

Phase/Wire : Power system 3P4W/3P3W that the filter connected.

Frequency : System frequency 50/60Hz

CPU1 Controller Ver. : CPU1 of main control board program version.

CPU2 Controller Ver. : CPU2 of main control board program version.

LCD Panel Program Ver. : LCD control panel CUP program version.

ID : Identification number for remote monitoring control.

Number of Parallel Unit : The numbers of the Control Module in parallel.

Parallel Number : The parallel number of the Control Module.

4-2-2. EVENTS LOG

1) Move the cursor by using ▼ ▲ keys to the **Events Log** and then press ↵ key to enter into the **EVENTS LOG** page.

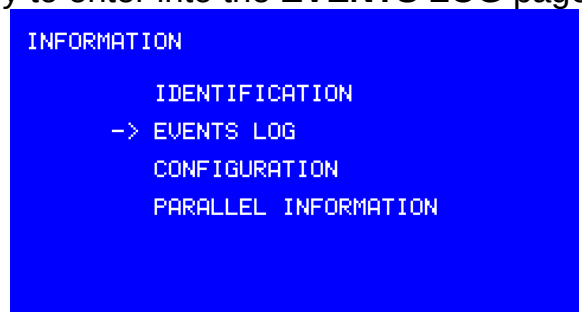

2) It shows the latest 3 events log records when you enter into the **EVENTS LOG** page. You may browse other records by using ▼ ▲ keys. Each LCD control panel may record max. 300 latest events log records. It means the record is storaged according to FIFO(First-in First-out) principle.

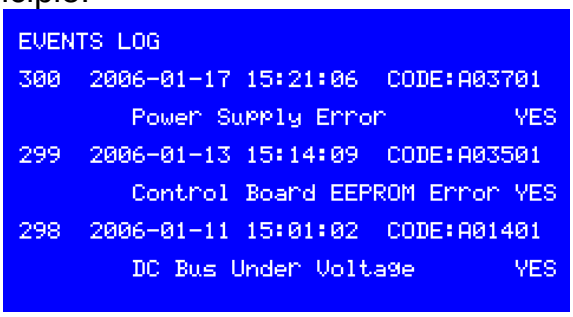

4-2-3. CONFIGURATION

1) Move the cursor to the **CONFIGURATION** by using ▼ ▲ keys and then press ↵ key to enter into the **CONFIGURATION** page.

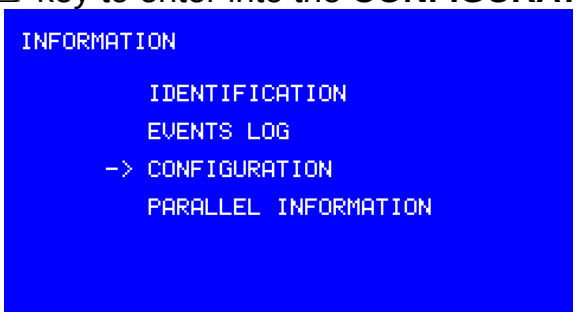

2) This **CONFIGURATION** page offers 3 different options.

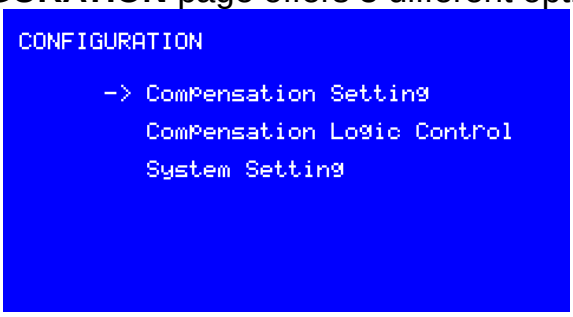

All those information are not programmable. If you need to change any setting, you have to consult with local authorized service agent.

4-2-3-1. Compensation Setting

1) Move the cursor to the **Compensation Setting** by using ▼ ▲ keys and then press ↵ key to enter into the **Compensation Setting** page.

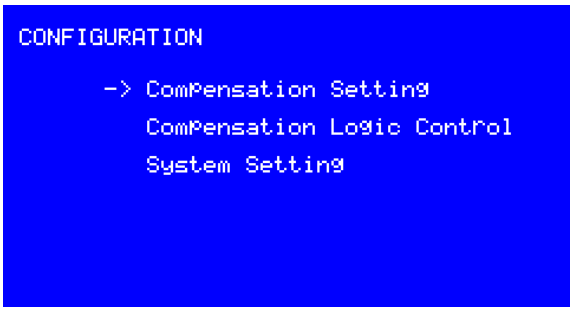

2) You may see the information when entering into the **Compensation Setting** page and the detailed information as below:

Harmonic Compensation	To show Harmonic Compensation is enabling or disabling.
Power Factor Correction	To show Power Factor Correction is enabling or disabling.
Compensation Priority	To show the setting priority of the compensation, either Harmonic Compensation or Power Factor Correction.
Reactive Power	To show the reactive power compensation mode is Target DPF or Fixed KVAR when Power Factor Correction is enabling.
Target DPF	To show the setting of Target DPF.
Fixed KVAR	To show the setting of Fixed KVAR.
Balance Utility	When 3 Phase current of the load is unbalance and Balance Utility is enabling the filter will compensate the system current to balance.
High Order Compensation	The filter can compensate from 31st to 51st harmonic orders, if this function is enable.
Harmonic Selection	To show the information of selected harmonic orders.

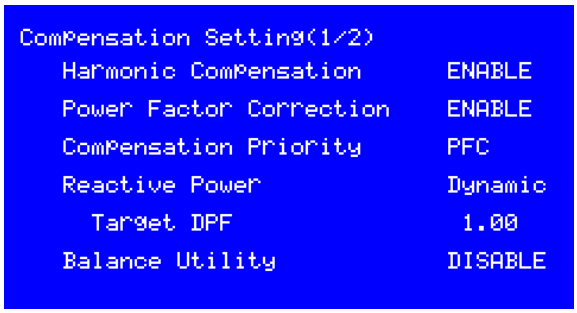

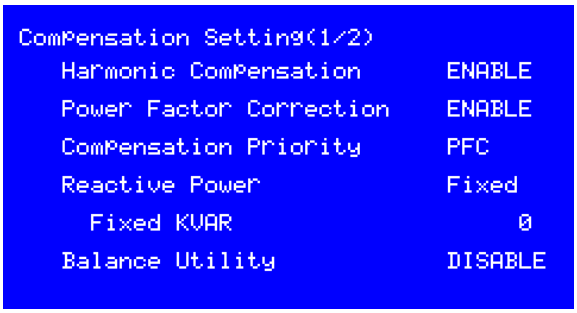

3) Scroll down the screen to another page of the **Compensation Setting** by using ▼ ▲ keys, then you may see the options—they are **High Order Compensation** and **Harmonic Selection**.

```
Compensation Setting(2/2)
   High Order Compensation    DISABLE
-> Harmonic Selection
```

4) First page shows the status of 2nd order to 13th order**.** You may use ▼ ▲ keys to scroll up and down to the other page.

```
 Harmonic Selection(1/3)
Ord. Sel. Act. Red.  Ord. Sel. Act. Red.
 2nd           100%   3rd  ✓    ✓   100%
 4th           100%   5th  ✓    ✓   100%
 6th           100%   7th  ✓    ✓   100%
 8th           100%   9th  ✓    ✓   100%
10th           100%  11th  ✓    ✓   100%
12th           100%  13th  ✓    ✓   100%
```

Ord. : Harmonic order.
Sel. : The selected harmonic order.
Act. : The active harmonic order.
Red. : The reduction ratio for the specific order.

5) Second page shows the status of 14th order to 25th order and third page shows the status of 26th order to 31st order.

```
 Harmonic Selection(2/3)
Ord. Sel. Act. Red.  Ord. Sel. Act. Red.
14th           100%  15th  ✓    ✓   100%
16th           100%  17th  ✓    ✓   100%
18th           100%  19th  ✓    ✓   100%
20th           100%  21st           100%
22th           100%  23th           100%
24th           100%  25th           100%
```

```
 Harmonic Selection(3/3)
Ord. Sel. Act. Red.  Ord. Sel. Act. Red.
26th           100%  27th           100%
28th           100%  29th           100%
30th           100%  31st           100%
```

4-2-3-2. Compensation Logic Control

1) Move the cursor to the **Compensation Logic Control** by using ▼ ▲ keys and then press ↵ key to enter into the **Compensation Logic Control** page.

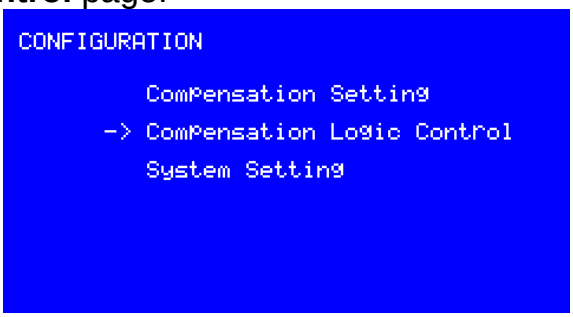

2) You may see the information when entering into the **Compensation Logic Control** page and the detailed information as below:

Smart Save Energy	Smart Save Energy	When this function is enabling, the filter can start-up or shutdown automatically, according to the load current level. When the load current less than Min. OFF Current Level for OFF delay time, the filter will shutdown automatic until the load current greater than Max. ON Current Level for ON Delay Time.
	ON Delay Time	The delay time for automatic start-up.
	OFF Delay Time	The delay time for automatic shutdown.
	Max. ON Current Level	The current level for automatic start-up.
	Min. OFF Current Level	The current level for automatic shutdown.
Auto Re-Start	Auto Re-Start	When this function is enabling, the filter is allowed to automatic re-start when some abnormal conditions return to normal. The abnormal conditions include system voltage abnormal, frequency error, etc
	Delay Time	The delay time for automatic re-start.

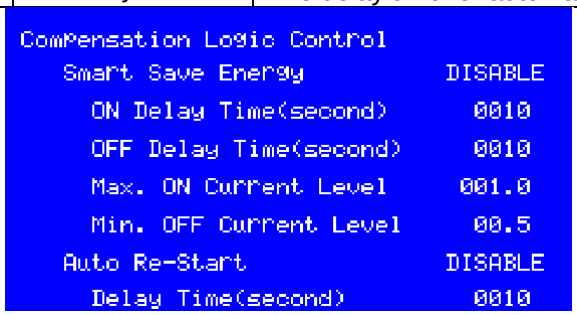

4-2-3-3. System Setting

1) Move the cursor to **System Setting** by using ▼ ▲ keys and then press ↵ key to enter into the **System Setting** page.

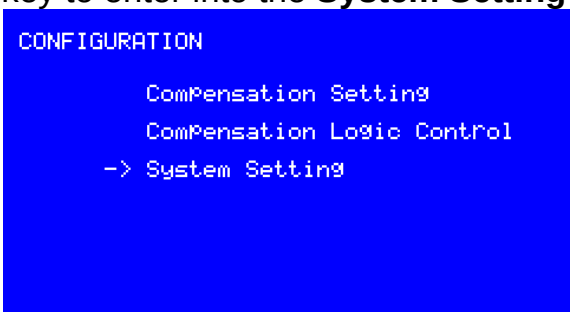

2) You may see the information when entering into the **System Setting** page and the detailed information as below:

Phase/Wire	Select 3P3W or 3P4W power system that the filter connected. If the system is 3P3W, neutral line doesn't need to connect.
Number of External CT	Select 2 or 3 external CTs that will install at Source/Load side. If the system is 3P4W, 3 CTs is needed.
Primary Ampere of CT	Set the primary current rating of External CT.
Secondary Ampere of CT	Set the secondary current rating of External CT. The Control Module can accept 1A.
CT Position	Select location where External CT should be installed.
CT Direction Detection	When this function enable, the filter will diagnose the polarity of External CT. When the polarity is incorrect, the filter will alarm and can not start-up.
Phase A CT	When the polarity of External CT is incorrect, set CT reversed can change CT polarity and don't need to reconnect the CT wires.
Phase B CT	
Phase C CT	
Parallel CT Ratio	Available Parallel CT ratio 500/1, 1000/1, 1500/1, 2000/1. When Control Modules operate in parallel, Parallel CT has to install.
Primary Voltage Level	The filter allows apply in different voltage level with an external transformer that install at the input side of the filter. When the external transformer is used, the voltage level should be set to primary voltage of the transformer.

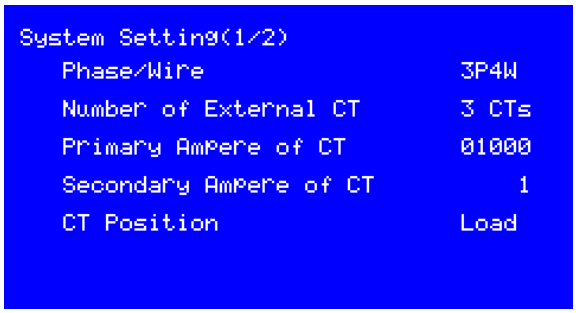

3) Use ▼ ▲ keys to change to another page.

4-2-4. PARALLEL INFORMATION

1) Move the cursor to the **PARALLEL INFORMATION** by using ▼ ▲ keys and then press ↵ key to enter into the **PARALLEL INFORMATION** page.

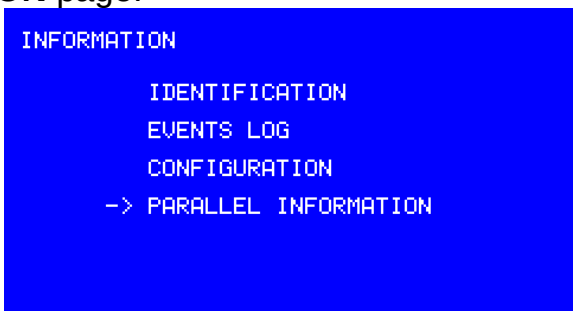

2) You may see the information when entering into the **PARALLEL INFORMATION** page.

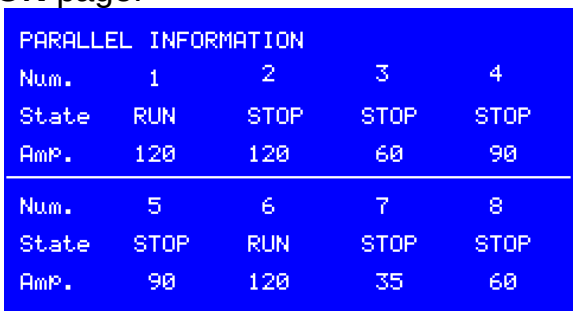

Num. : Indicate the number of parallel.
State : Indicate the state of the filter.
Amp. : Indicate the current Rating of the filter.

4–3. METER

4-3-1. PARAMETER

1) In the **Main** screen, move the cursor to the **METER** by using ▼ ▲ keys and then press ↵ key to enter into the **METER** page.

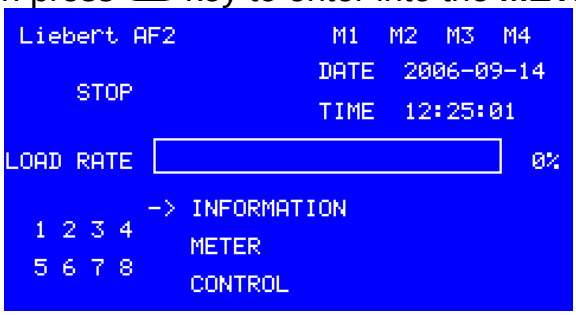

2) Move the cursor to **PARAMETER** by using ▼ ▲ keys and then press ↵ key to enter into the **PARAMETER** page.

3) 3 different options below might be selected.

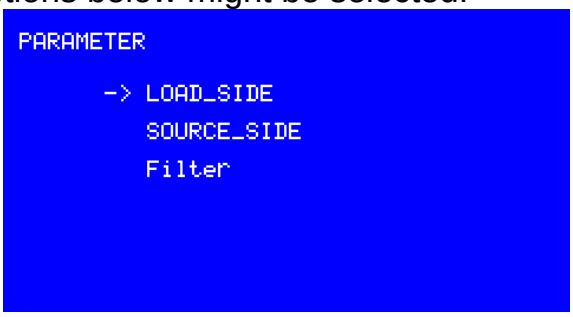

LOAD_SIDE : To show the power parameter of load.
SOURCE_SIDE : To show the power parameter of source.
Filter : To show the power parameter of filter.

4) **LOAD_SIDE** and **SOURCE_SIDE** page show below parameter.

```
LOAD_SIDE

KVA =  89.3  Freq= 60.1Hz PF  = 0.76
Vab =  401 V Vbc =  400 V Vca =  403 V
THDv=   1.3% THDv=   1.6% THDv=   1.8%
Ia  =  128 A Ib  =  125 A Ic  =  128 A
THDi=  82.1% THDi=  84.2% THDi=  81.7%
In  =  216 A
```

5) **Filter** page show below parameter.

```
Filter

KVA =  53.5  Freq= 60.1Hz
Vab =  401 V Vbc =  400 V Vca =  403 V
THDv=   1.3% THDv=   1.6% THDv=   1.8%
Ia  =  102 A Ib  =  100 A Ic  =  103 A
In  =  206 A
```

KVA	**:** Complex power
Freq	**:** System frequency
PF	**:** Power Factor
Vab ,Vbc, Vca	**:** Three phase line to line rms voltage
Ia, Ib, Ic	**:** Three phase line rms current
In	**:** Neutral line rms current
THDv	**:** Total harmonic voltage distortion
THDi	**:** Total harmonic current distortion

4-3-2. WAVEFORM

1) Move the cursor to the **WAVEFORM** by using ▼ ▲ keys and then press ↵ key to enter into the **WAVEFORM** page.

```
METER

          PARAMETER
       -> WAVEFORM
          SPECTRUM
```

2) In the **WAVEFORM** page, use ◄ ► ▼ ▲ keys to move the cursor to the desire parameter you wish to view the waveform. You can choose up to 2 parameters for viewing. The waveform will be display on "**WAVEFORM WINDOW 1**" and "**WAVEFORM WINDOW 2**".

```
WAVEFORM
          Ia(L) -> Ia(S)    Ia(F)
  Vab     Ib(L)    Ib(S)    Ib(F)
  Vbc     Ic(L)    Ic(S)    Ic(F)
  Vca     In(L)    In(S)    In(F)   VIEW
=========================================
        WAVEFORM WINDOW 1 = Ia(S)
        WAVEFORM WINDOW 2 = Ia(L)
```

Vab, Vbc, Vca	**:** Three phase line to line voltage.
Ia(L), Ib(L), Ic(L)	**:** Three phase line current of load side.
Ia(S), Ib(S), Ic(S)	**:** Three phase line current of source side.
Ia(F), Ib(F), Ic(F)	**:** Three phase line current of filter side.
In(L)	**:** Neutral line current of load side.
In(S)	**:** Neutral line current of source side.
In(F)	**:** Neutral line current of filter side.

3) Once you have selected the desire parameter, move the cursor to "**VIEW**" and then press ↵ key.

```
WAVEFORM
          Ia(L)    Ia(S)    Ia(F)
  Vab     Ib(L)    Ib(S)    Ib(F)
  Vbc     Ic(L)    Ic(S)    Ic(F)
  Vca     In(L)    In(S)    In(F) ->VIEW
=========================================
        WAVEFORM WINDOW 1 = Ia(S)
        WAVEFORM WINDOW 2 = Ia(L)
```

4) You can see two waveforms you selected in one screen simultaneously. Use ▼ ▲ keys to display rms or THD of the waveforms.

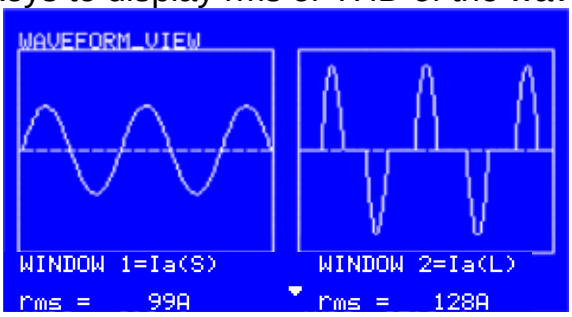

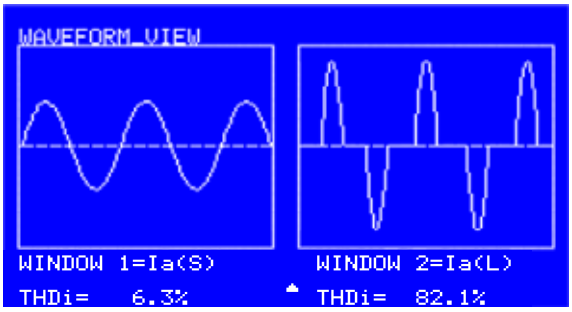

4-3-3. SEPCTRUM

1) Move the cursor to the **SPECTRUM** by using ▼ ▲ keys and then press ↵ key to enter into the **SPECTRUM** page.

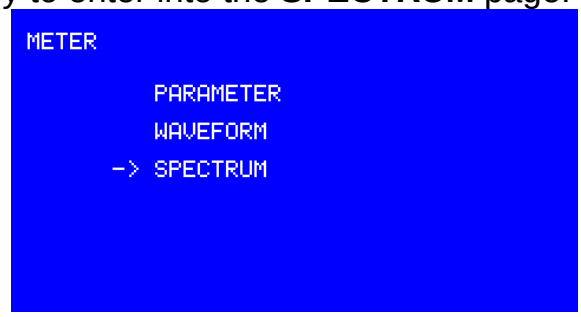

2) In the **SPECTRUM** page, use ◄ ► ▼ ▲ keys to move the cursor to the desire parameter you wish to view the spectrum and then press ↵ key to view the spectrum.

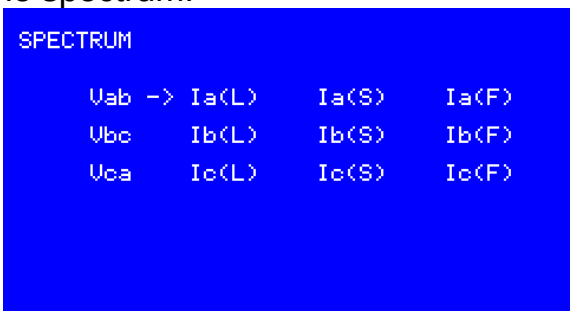

Vab, Vbc, Vca : Three phase line to line voltage.
Ia(L), Ib(L), Ic(L) : Three phase line current of load side.
Ia(S), Ib(S), Ic(S) : Three phase line current of source side.
Ia(F), Ib(F), Ic(F) : Three phase line current of filter side.

3) The page 1 shows the spectrum from 1st to 26th order. Use ◄ ► keys to move the cursor to the desire harmonic order you wish to view. Use ▼ ▲ keys to change to another page.

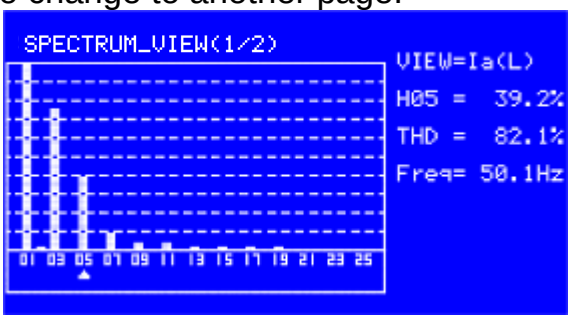

Hxx : The harmonic distortion for specific harmonic order.
THD : The total harmonic distortion.
Freq : System frequency

4) The page 2 shows the spectrum from 27th to 51st order.

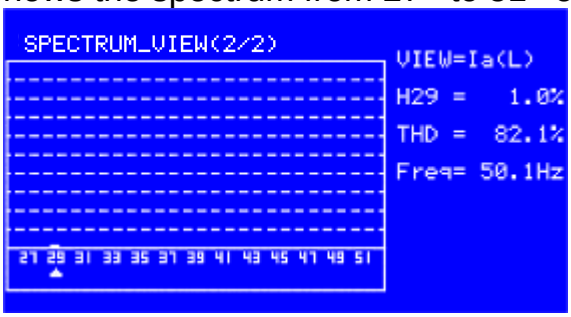

4–4. CONTROL

4-4-1. Go to CONTROL Menu

1) In **Main** screen, move the cursor to the **CONTROL** by using ▼ ▲ keys and press ↵ key to enter into the **CONTROL** page.

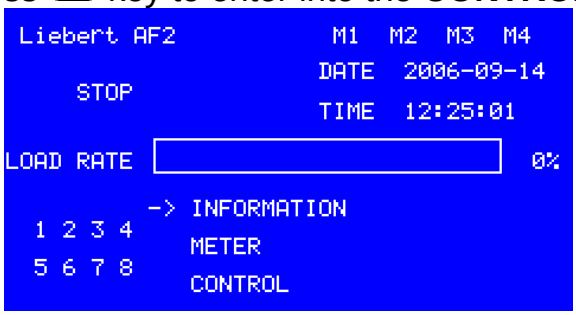

2) The system will ask for password before displaying the **CONTROL** page. To enter the password, use ▼ ▲ keys to select from 0~9 for each digit, and ◄ ► keys to move from the 1st digit to 4th digit. Use ↵ key to enter the password. Once password is confirm by the system, the **CONTROL** page will be displayed. The default password is "0000" and user can change the password. Please refer to section 4-4-7 to change the password.

3) The **CONTROL** page offer 7 function as below:

4-4-2. Filter RUN/STOP

1) The **Filter** function provides a command for start-up or shutdown the filter. Move the cursor to the **Filter** by using ▼ ▲ keys and then press ↵ key to send a command to start-up or shutdown the filter.

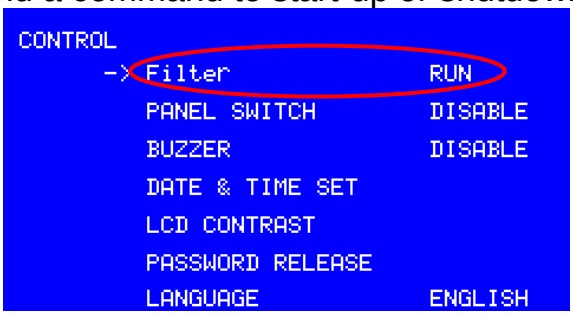

Filter RUN is start-up command.
Filter STOP is shutdown command.
When the filter is filtering, **Filter STOP** is displayed**;** on the other hand, **Filter RUN** is displayed.

2) Press ↵ key to send a start-up command, a confirm screen will be displayed as below. Use ◄ ► keys to move the cursor to "YES" and then press ↵ key to start-up the filter.

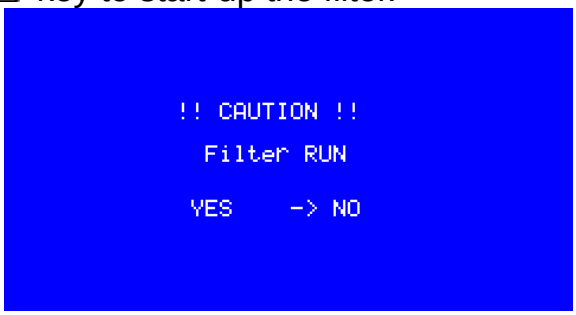

3) When the filter is turn on, the **"FILTERING"** LED indicator on the control panel will be lighted up and **Filter RUN** change to **Filter STOP**.

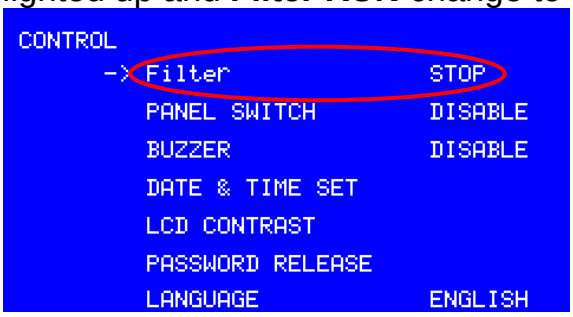

4) Press ↵ key to send a shutdown command, a confirm screen will be displayed as below. Use ◄ ► keys to move the cursor to “YES” and press ↵ key to shutdown the filter.

4-4-3. PANEL SWITCH ENABLE/DISABLE

1) The **PANEL SWITCH** provides a command to Enable/Disable the ON/OFF keypad on the control panel. Use ▼ ▲ keys to move the cursor to the **PANEL SWITCH** and then press ↵ key for Enable/Disable the ON/OFF keypad.

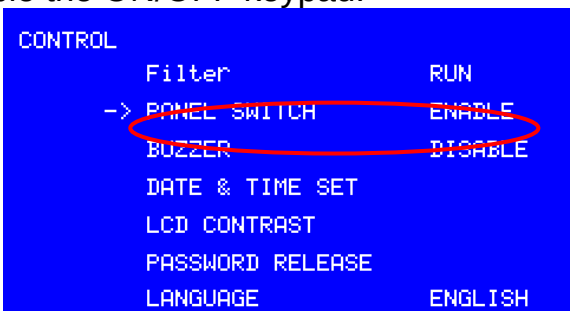

PANEL SWITCH ENABLE is a command for enable the ON/OFF keypad.
PANEL SWITCH DISABLE is a command for disable the ON/OFF keypad.

2) When the **PANEL SWITCH DISABLE** is displayed, it means ON/OFF keypad is functional and user can start-up or shutdown the filter by ON/OFF keypad. On the other hand, ON/OFF keypad is nonfunctional.

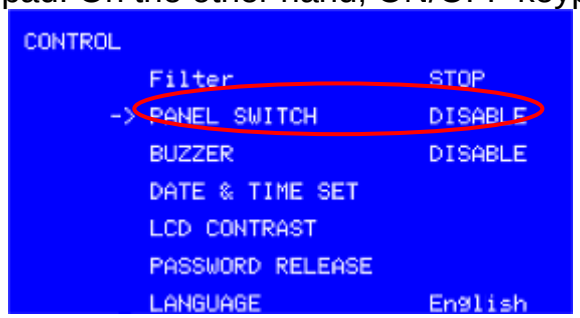

4-4-4. BUZZER ENABLE/DISABLE

1) The **BUZZER** provides a command to Enable/Disable the buzzer. Use ▼ ▲ keys to move the cursor to the **BUZZER** and then press ↵ key for Enable/Disable the buzzer.

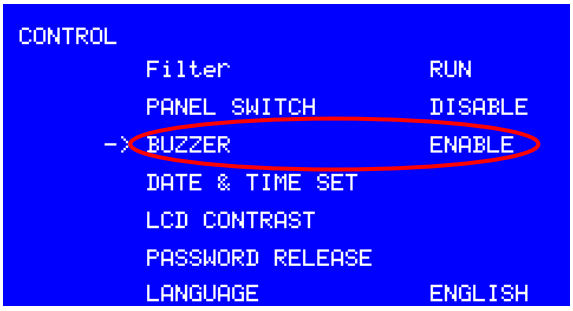

BUZZER ENABLE is a command for enable the buzzer.
BUZZER DISABLE is a command for disable the buzzer.

2) When the **PANEL SWITCH DISABLE** is displayed, it means the buzzer will alarm if abnormal condition is happen. On the other hand, the buzzer will be silent.

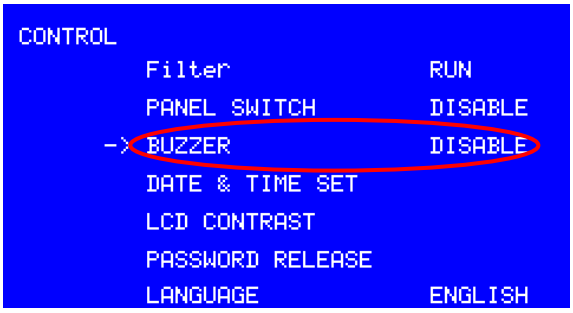

4-4-5. DATE & TIME SET

1) Use ▼ ▲ keys to move the cursor to **DATE & TIME SET** and then press ↵ key for set the current date and time.

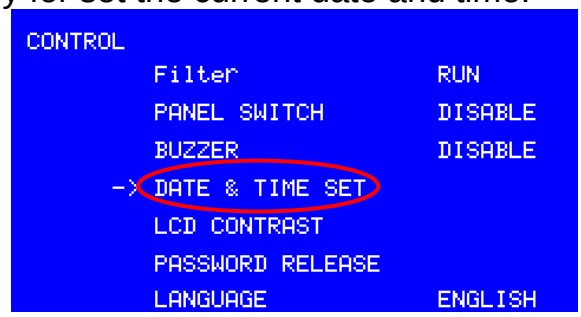

2) In the **DATE & TIME SET** page, use ◄ ► keys to move the cursor to desire field and then use ▼ ▲ keys to change the desire date and time. Press ↵ to save the final setting.

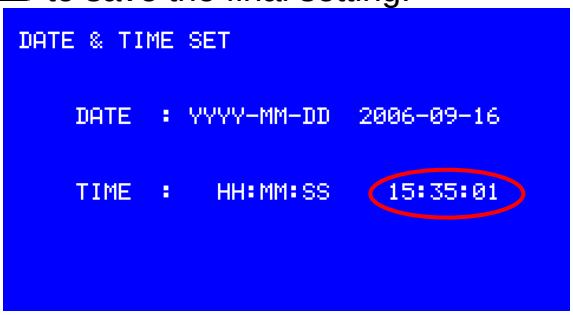

3) Now, the date and time have been changed.

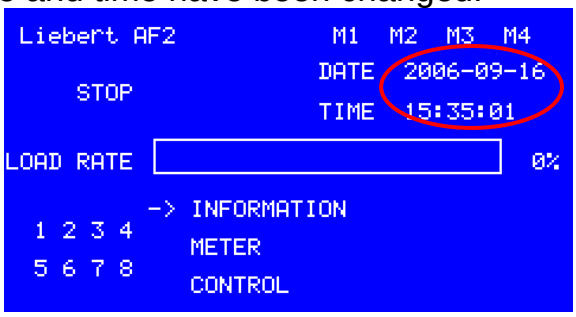

Note: The current date and time will be lost and reset to the initial conditions (2000-00-00 00:00:00), when the filter is disconnected with power utility for 168 hours (7 days). This change shall not affect the stored parameter on the control panel.

4-4-6. LCD CONTRAST

1) Use ▼ ▲ keys to move the cursor to the **LCD CONTRAST** and then press ↵ key to adjust contrast of LCD display.

2) Use ◄ ► key to adjust contrast of LCD display.

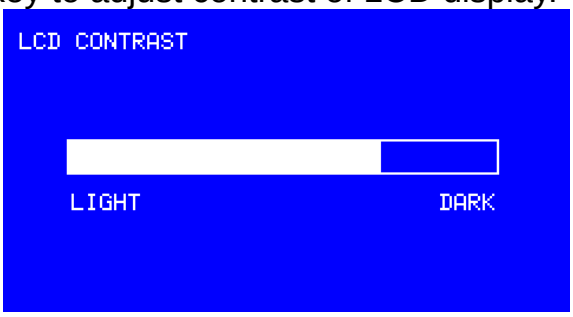

4-4-7. PASSWORD RELEASE

1) Use ▼ ▲ key to move the cursor to the **PASSWORD RELEASE** and then press ↵ key for change the password.

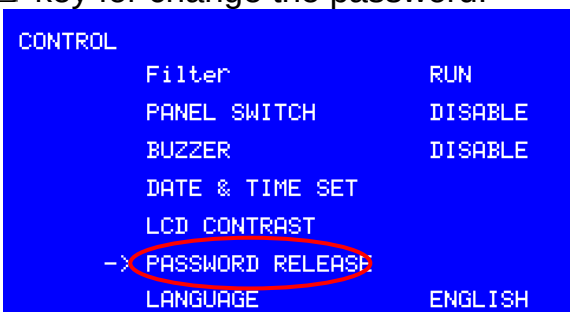

2) First, enter the exist password. Use ▼ ▲ keys to select from 0~9 for each digit, and ◄ ► keys to move from the 1st digit to 4th digit. Use ↵ key to enter the password.

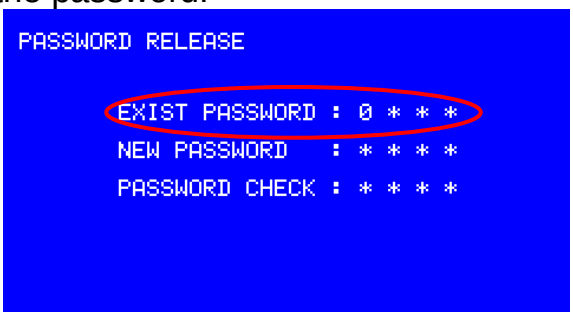

3) Second, enter the new password and then press ↵ key.

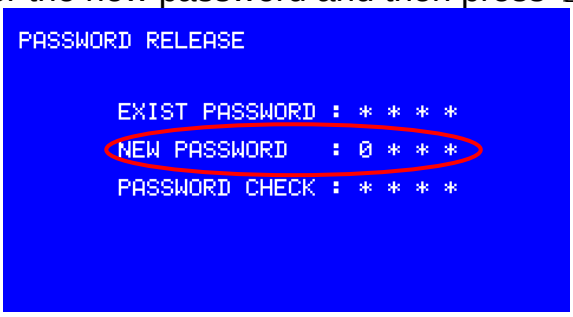

4) Third, enter the new password again and then press ↵ key.

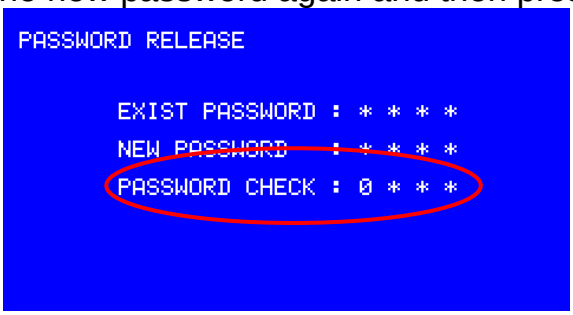

5) Now, the password has been changed.

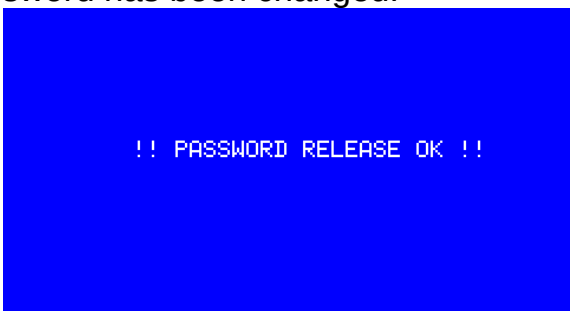

6) If the password is incorrect, a warning will show on the screen. Please follow the procedure of this section to change the password again.

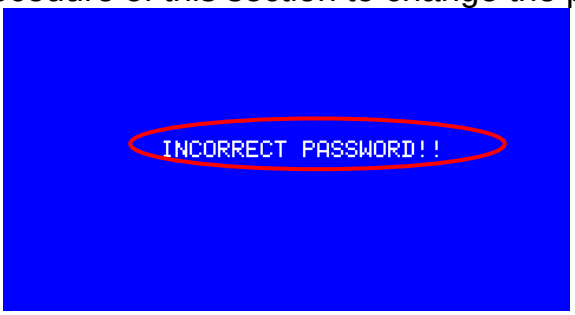

4-4-8. Language

1) Use ▼ ▲ keys to move the cursor to the **Language** and then press ↵ key to change the language that show on the LCD display.

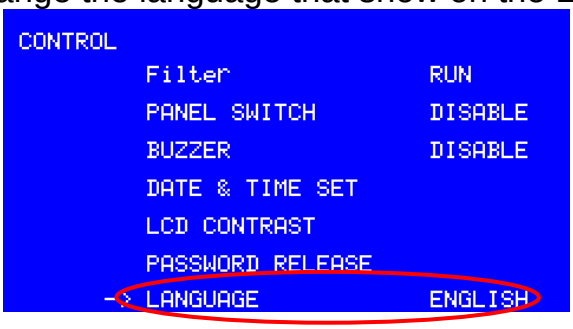

5. Options

5–1. Optional Communication Card

This chapter introduces the function and installation of optional RS485/RS422 and Ethernet communication cards.

The installation procedures of the communication card as below:

Step 1: Remove the front bezel.

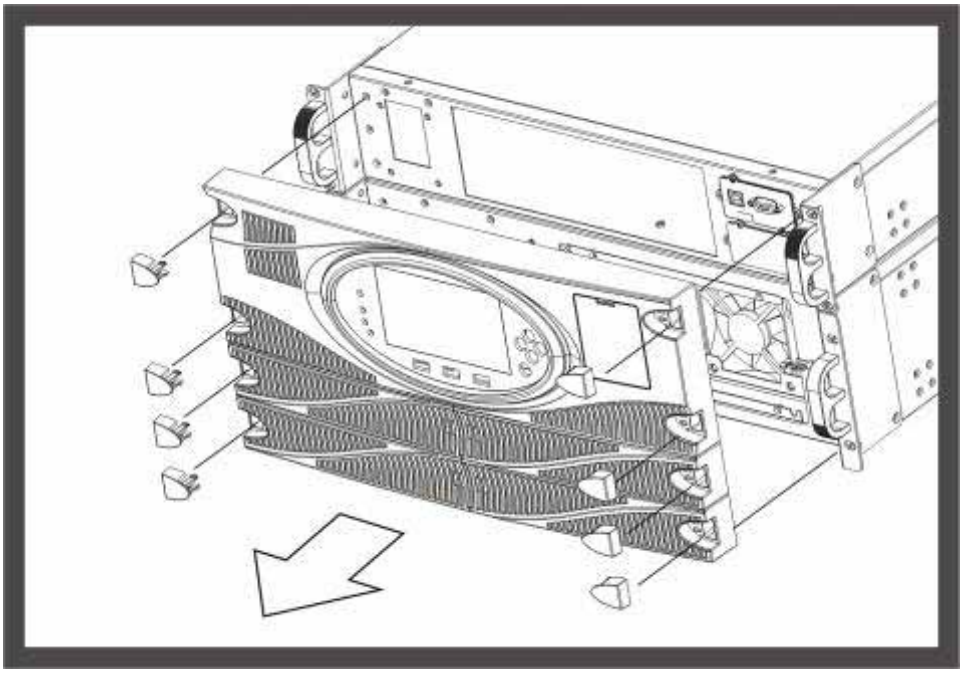

Step 2: Remove the front cover of the communication slot.

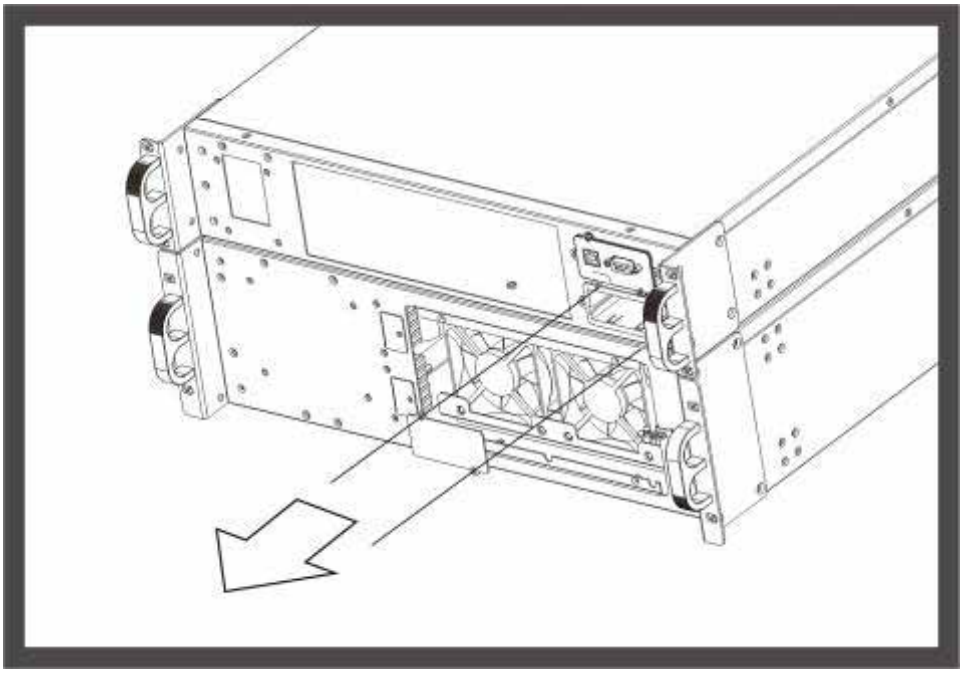

Step 3: Fasten the communication card in the slot.

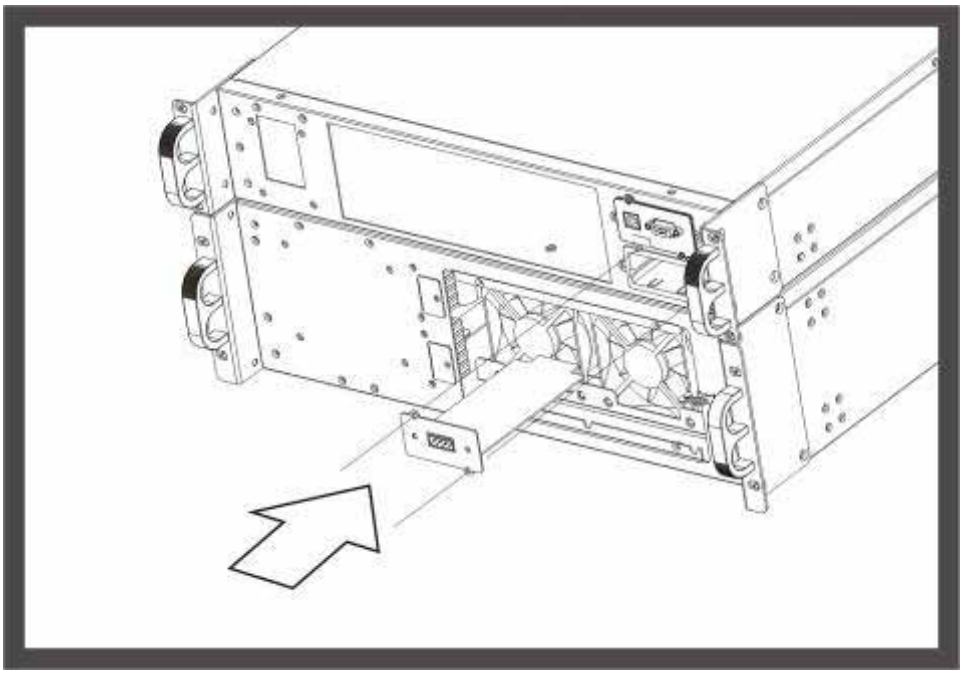

Step 4: The communication card are installed properly.

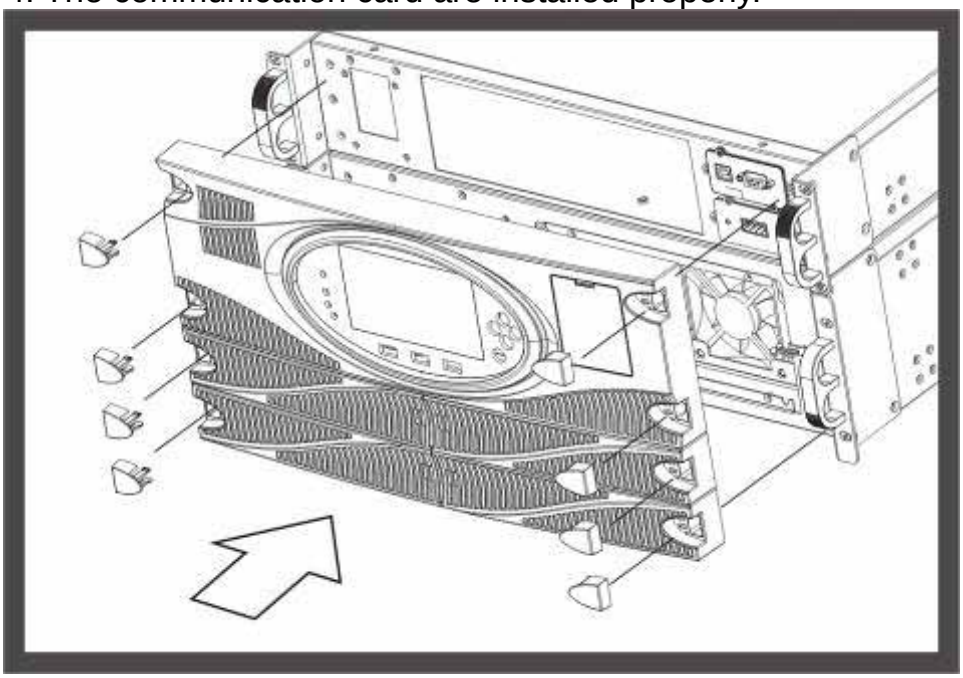

5-1-1. RS485/422 Communication Card

RS422 and RS485communication interfaces cannot use at the same time. The ID numbers of each Control Module unit have to different, when use RS485 or RS422 for communication linking. User can use software, **AF Setting Tool**, to set the ID number.

The setting procedures of **AF Setting Tool** as below:

Step 1: Please link with the computer through RS232 communication port of the Control Module and then execute **AF Setting Tool**.

Step 2: Please select the communication port of the computer.

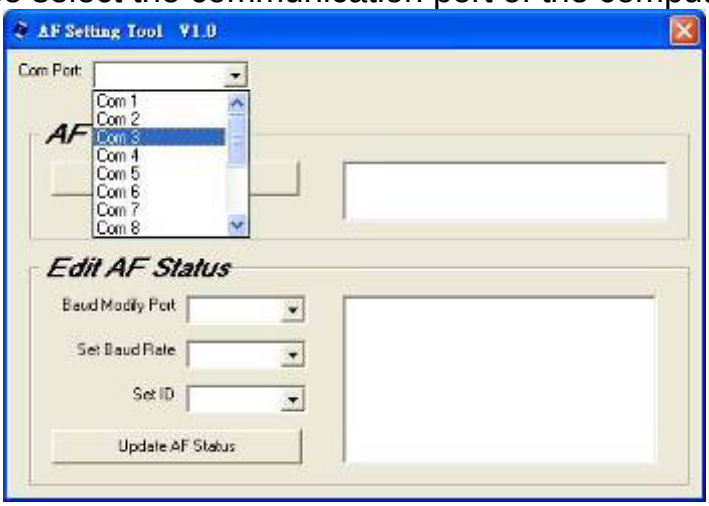

Step 3: After the communication port set properly, the computer can read the ID and Baud Rate of communication card.

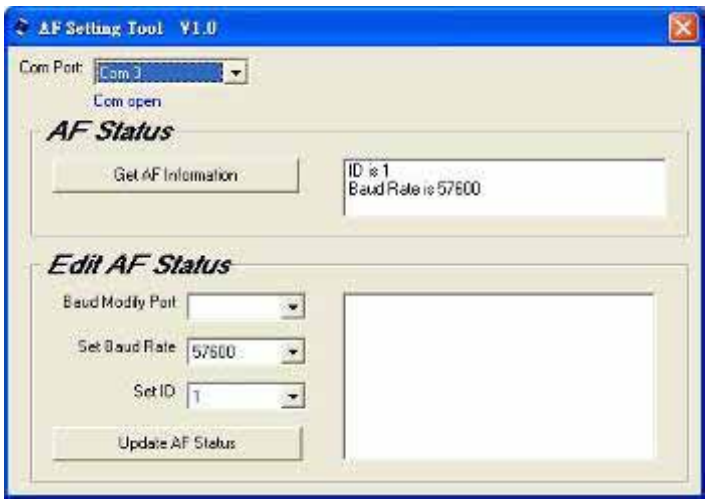

Step 4: If the communication port is set incorrect or the communication connection between computer and the Control Module is disconnected, the message “Couldn’t link AF device” will display.

Step 5: Please press Update ESD Status to reset the setting, if the message “Couldn’t link ESD device” still exist after ensure the communication port and communication connection.

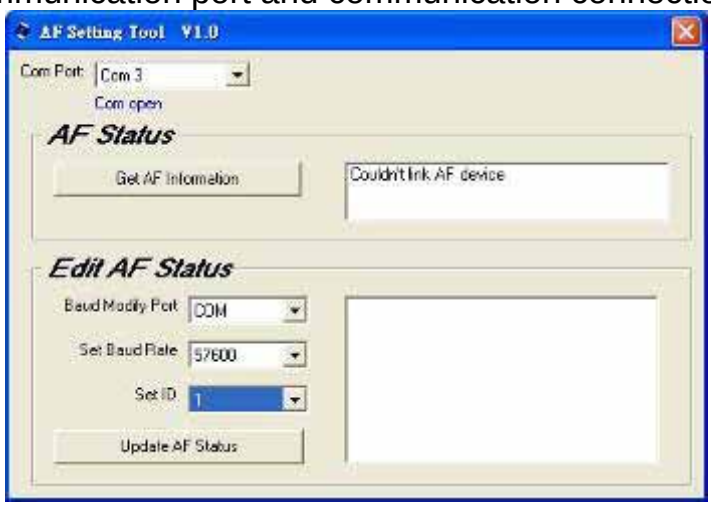

Step 6: User can set the setting for communication card when communication linking is ok. Enter the newest setting and then press Update ESD Status for update the setting.

Baud Modify Port: Select which communication interface is allowed to modify the Baud Rate through monitoring software ***Liebert AF2 Monitor Software.***

Set Baud Rate : Set baud rate for communication.

Set ID : ID number for RS485/RS422 communication.

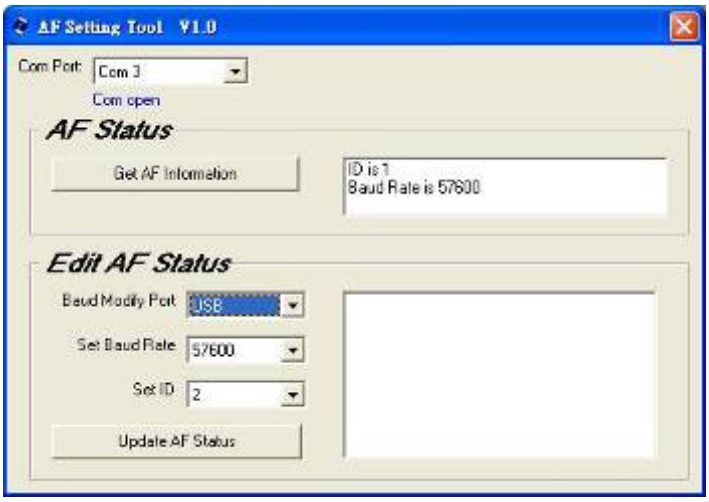

Step 7: When the settings have been update successfully, you can find below message.

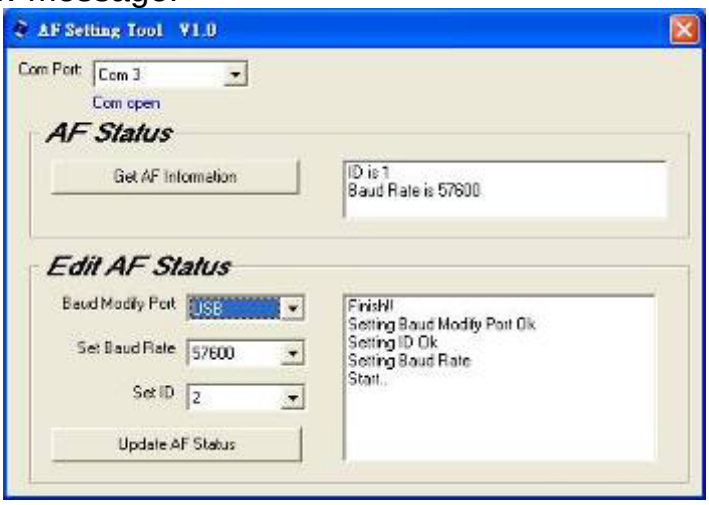

5-1-2. Ethernet Communication Card

User can use software "**AF IP Setting Kit**" to set the IP address and Baud Rate for the Ethernet communication card.

The setting procedures of **AF IP Setting Kit** as below:

Step 1: Connect the Ethernet card with the computer by the RJ45 cable that is offered with the Ethernet card.

Step 2: Use the following IP address setting.

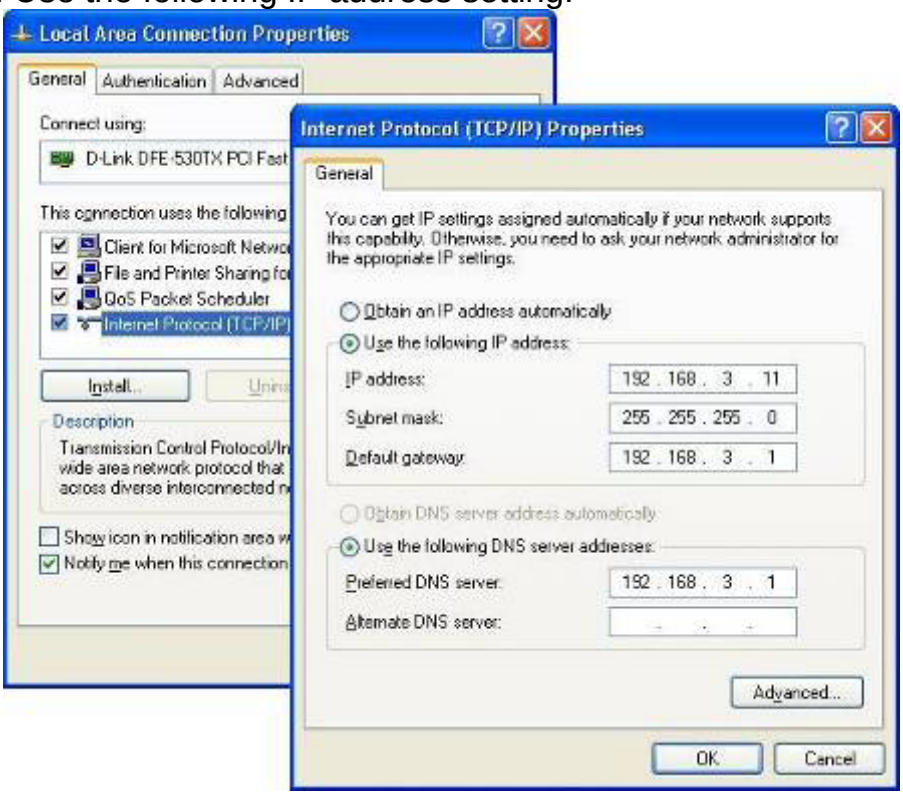

Step 3: Execute **AF IP Setting Kit**.

Step 4: Press Search for search the Ethernet card.

MAC：Media Access Control Address of the Ethernet card.

IP Address：Internet Protocol Address of Ethernet Card.

Step 5: Click the desire Ethernet card to enter into a Setting window for set the IP address and Baud Rate for this Ethernet card. Press Update for update the settings.

Note: The Baud Rate setting has to the same as RS232/USB communication card.

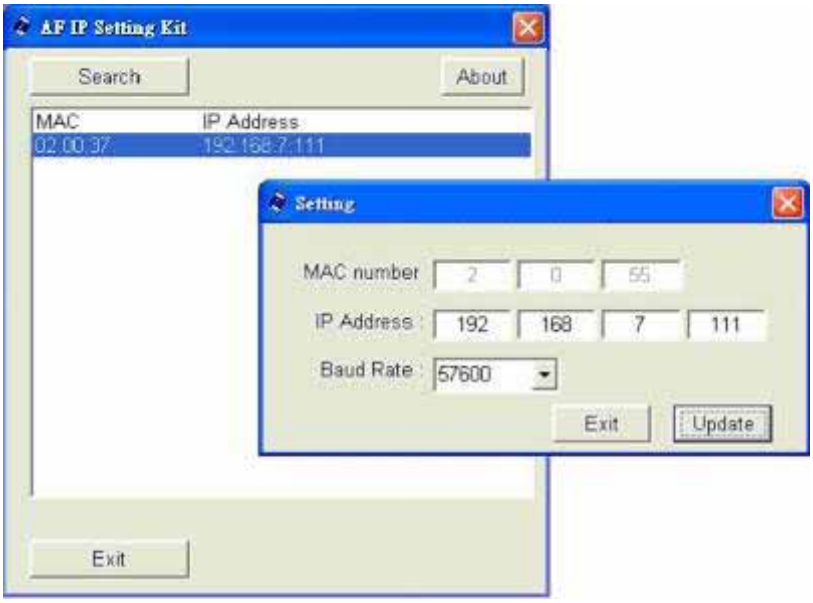

5–2. Centralized Control Unit

The Centralized Control Unit can monitor and control up to 8 Control Modules via RS-485 communication.

5-2-1. Installation

5-2-1-1. Install in a rack cabinet

Step 1:

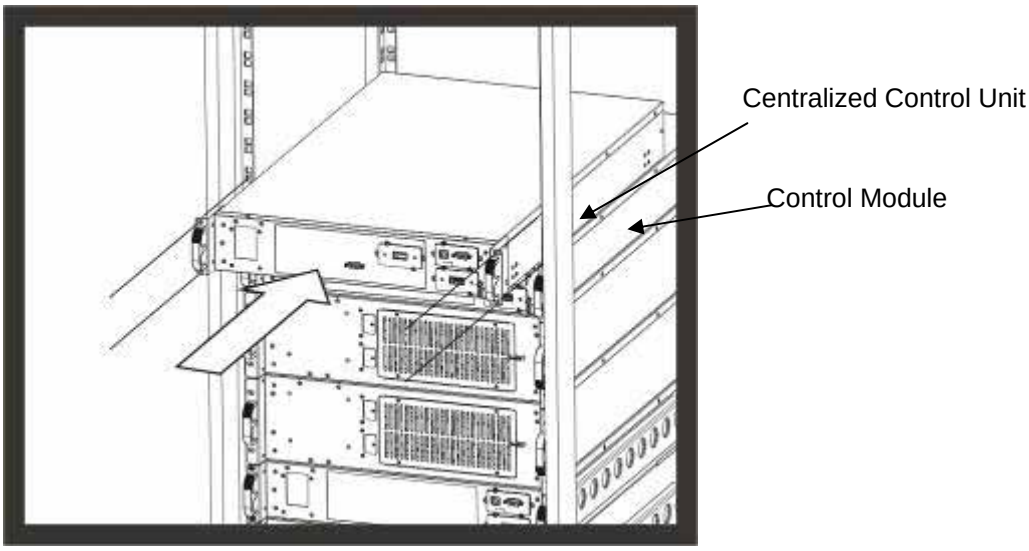

Step 2:

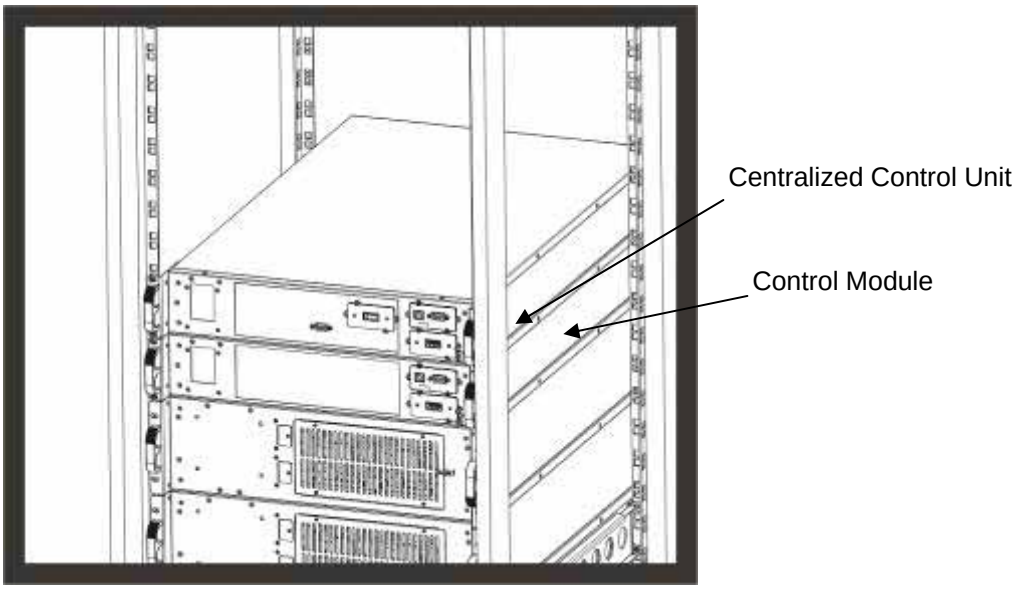

5-2-1-2. Wires Connections

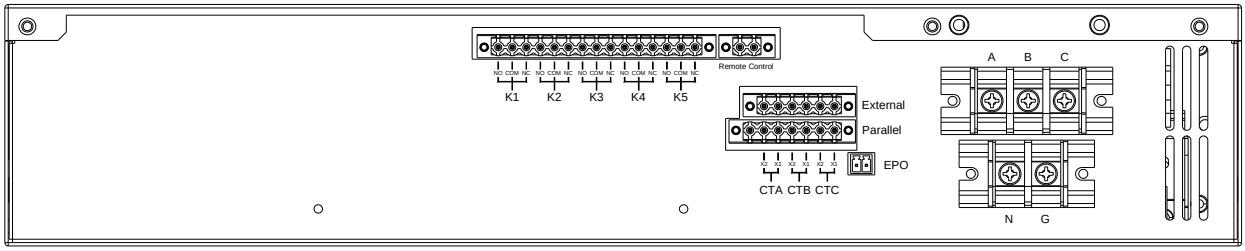

Drawing 5-1 Rear Panel of the Centralized Control Unit

A. Power Connection Terminal

N: Neutral Line
A: Phase 1
B: Phase 2
C: Phase 3
G: Grounding
(Power Earth)

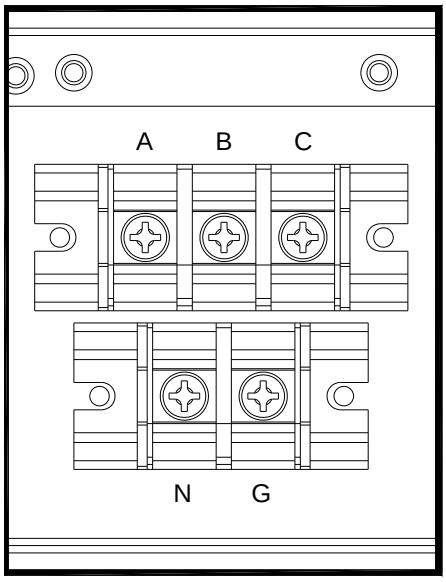

B. External CT Connection

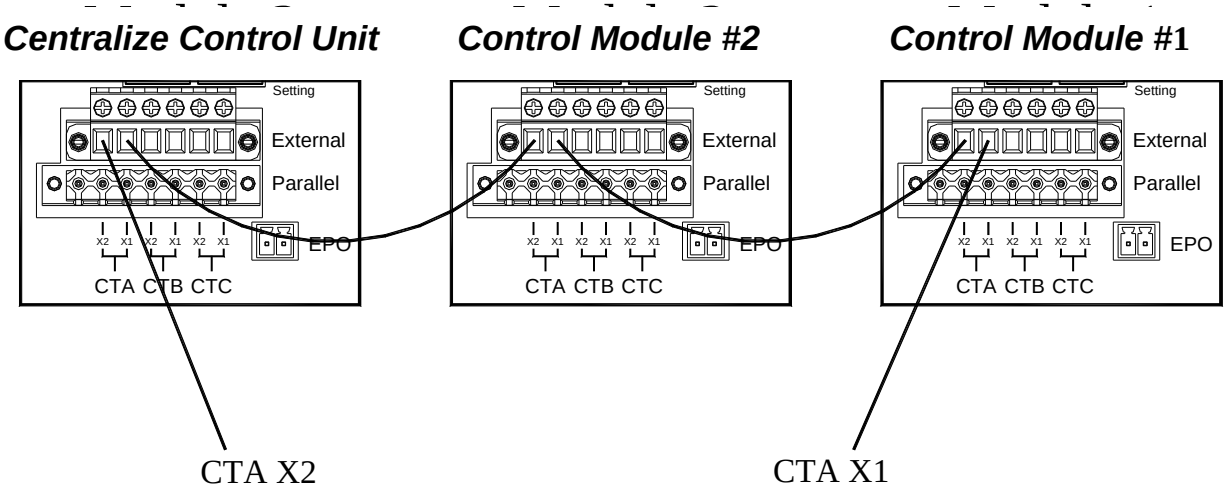

C. Parallel CT Connection

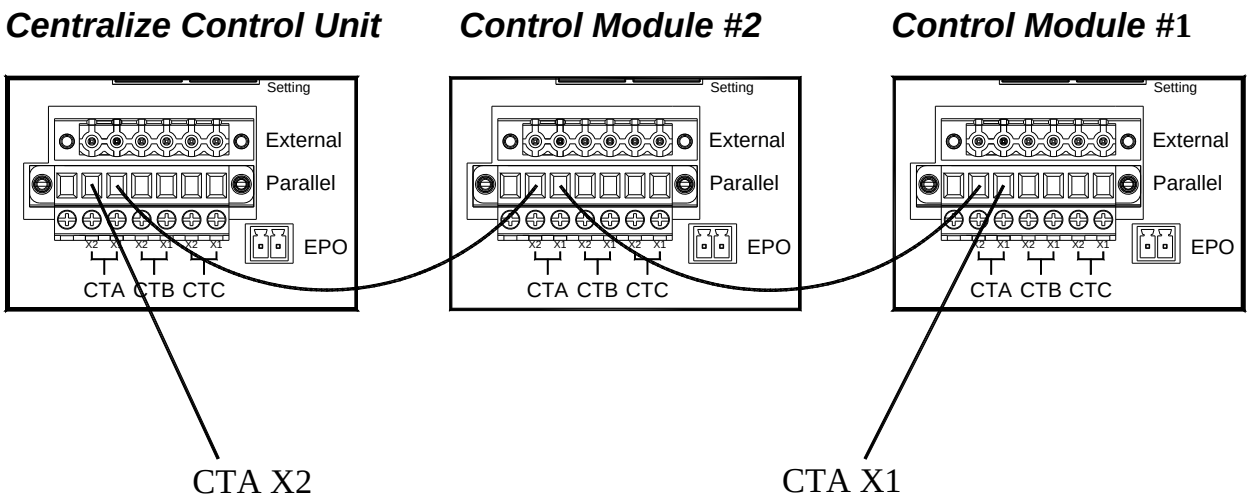

5-2-1-3. Communication Connections

The Centralized Control Unit provides 3 communication slots. The first slot has installed RS485/422 communication card already for communicates with other Control Modules. The second slot offer RS232/USB interface. The third slot for install optional RS485/422 or Ethernet card.

The Centralized Control Unit communicates with other Control Modules through RS485 Communication card, all Control Modules has to install optional RS485/422 Communication Card. The connections show as Drawing 5-2.

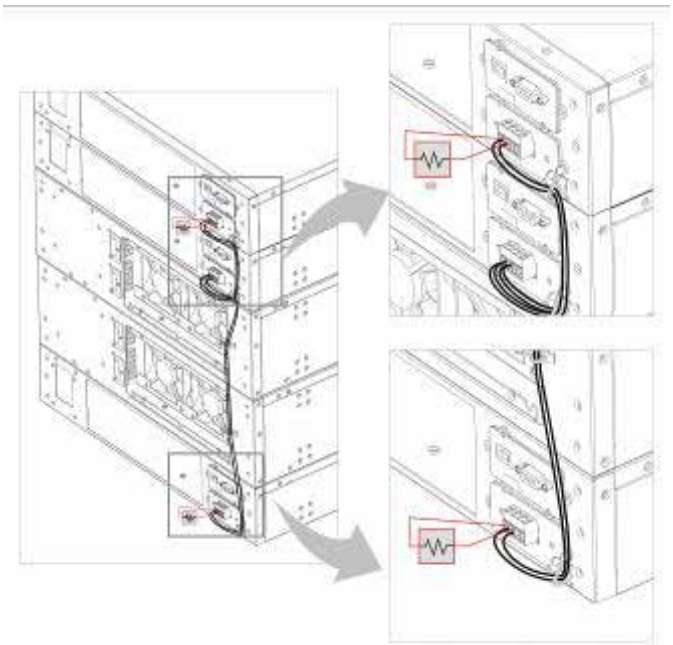

Drawing 5-2 Communication Connections between Centralized Control Unit and Control Modules

5-2-2. LCD Display Function Explanation

Drawing 5-3 indicate the function block of the LCD Display of Centralize Control Unit.

Because most of functions are the same as LCD Control Panel, please refer to Chapter 4 for more detail and the below sections only introduce the special functions of Centralize Control Unit.

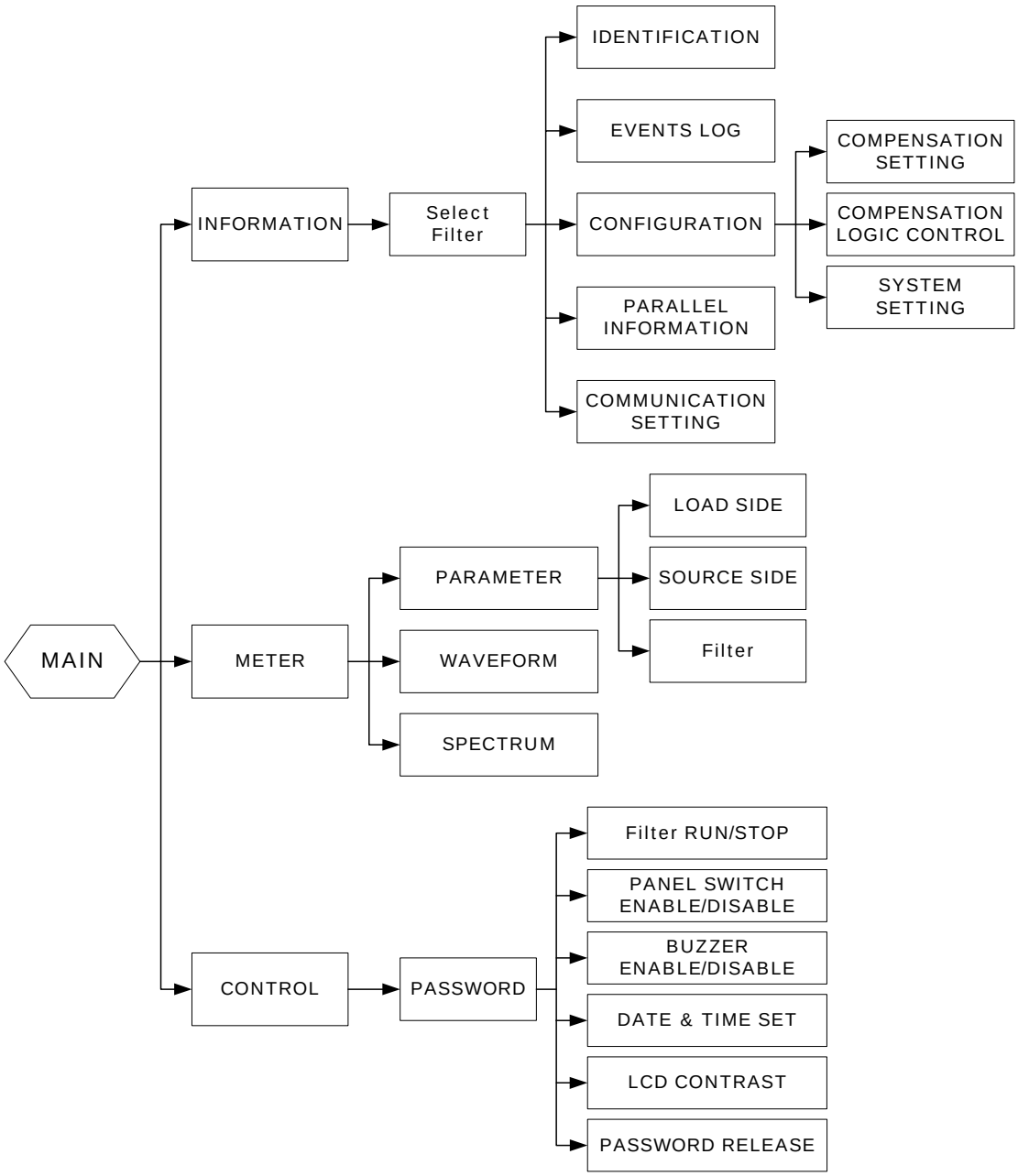

Drawing 5-3 LCD Display of Centralize Control Unit Function Block

5-2-2-1. Main Screen Function Explanation

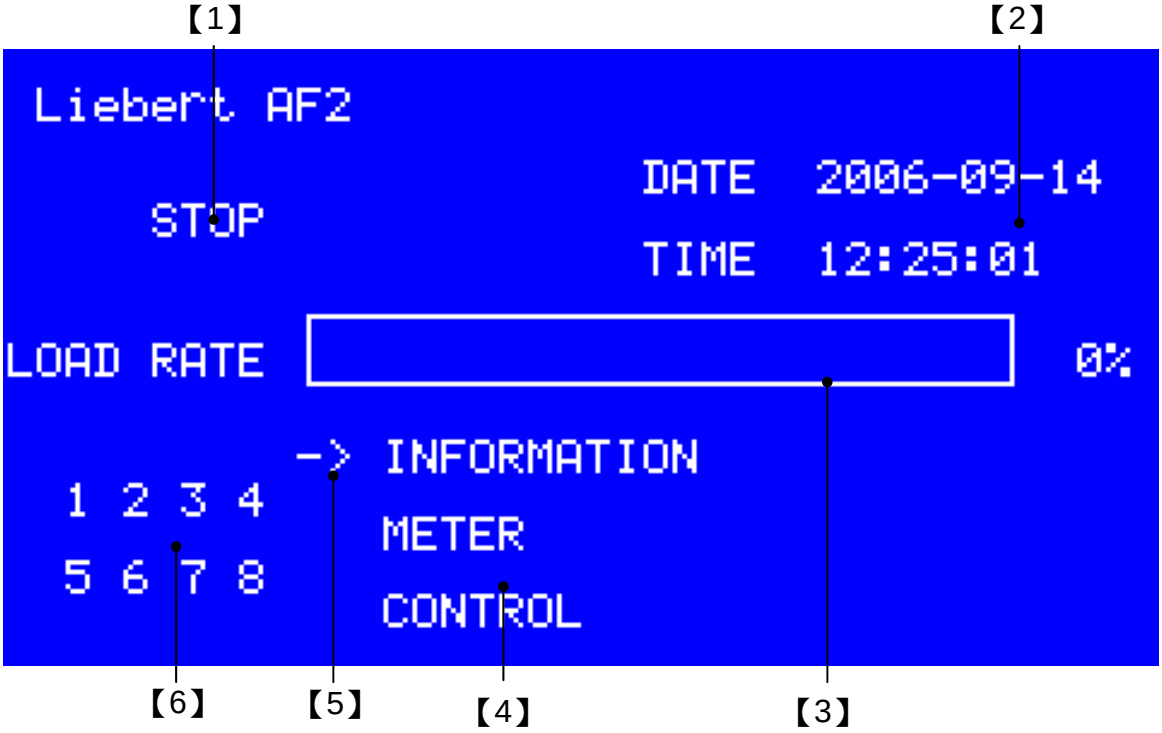

【1】 The operation status of the filter.
”RUNNING >>>>“
“STOP”

【2】 Current date and time.

【3】 Percentage of compensation capacity.

【4】 Main Menu.

【5】 Cursor：Use ▼ ▲ keys to move the cursor.

【6】 Control Module ID Number.

1/2/3/4/5/6/7/8 Display	: The Control Module of specify ID Number has communicated with Centralize Control Unit.
1/2/3/4/5/6/7/8 Hide	: The Control Module of specify ID Number is disconnected.
1/2/3/4/5/6/7/8 Blink	: The Control Module of specify ID Number has some abnormal condition.

5-2-2-2. COMMUNICATION SETTING

In order to communicate with all control modules, the communication setting should be set as follows,

1) In the Main screen, move the cursor to the **INFORMATION** by using ▼ ▲ keys and then press ↵ key to enter into the **INFORMATION** page to set the communication.

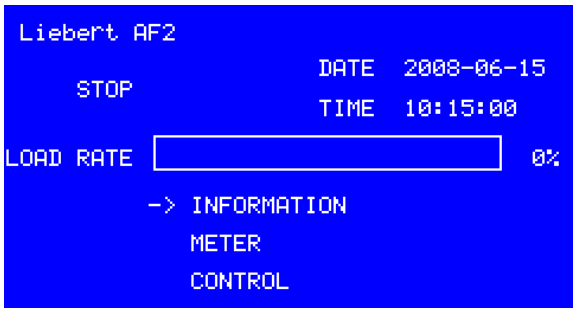

2) While first time installs the Centralize Control Unit, the system will into the COMMUNICATION SETTING page. Move the cursor by using ▼ ▲ ◀ ▶ keys to select the filter and press ↵ key to enter into the setting. The **ID** number will blink and using ▼ ▲ keys to change the ID number. The **ID** number has to the same as the Control Module Setting. Press ↵ key to confirm the setting.

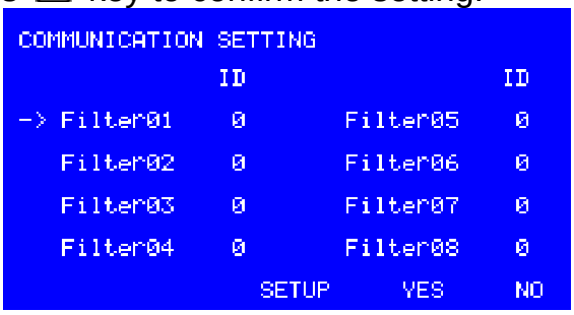

3) After set the **ID** number, Move the cursor by using ▼ ▲ ◀ ▶ keys to "YES" and then press ↵ key to save the setting.

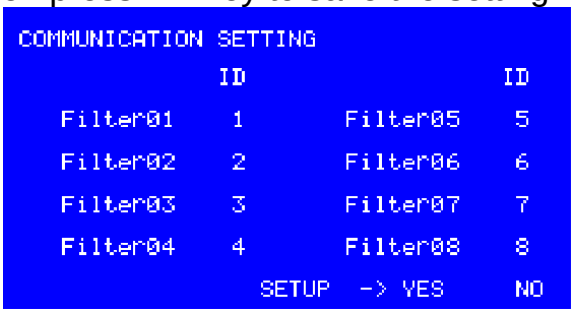

4) If the communication setting is correctly, the Main screen will display the Control Module ID Number that has been linked.

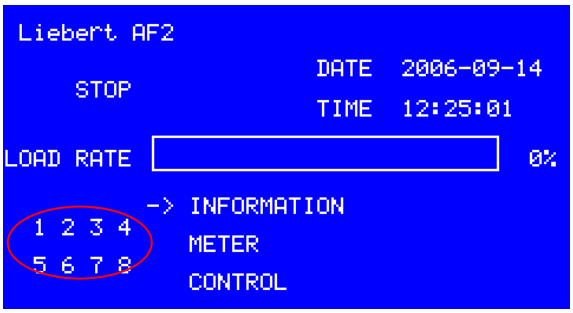

5) In the Main screen, move the cursor to the **INFORMATION** by using ▼ ▲ keys and then press ↵ key to enter into the **Select Filter** page. In this page, please select which filter information you want to see by using ▼ ▲ ◀ ▶ keys and then press ↵ key to enter into information menu.

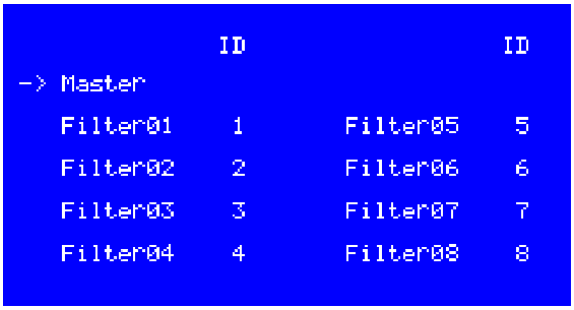

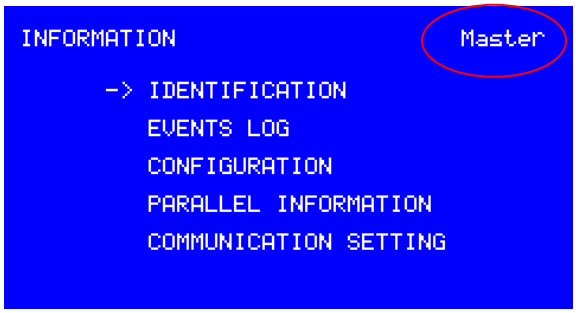

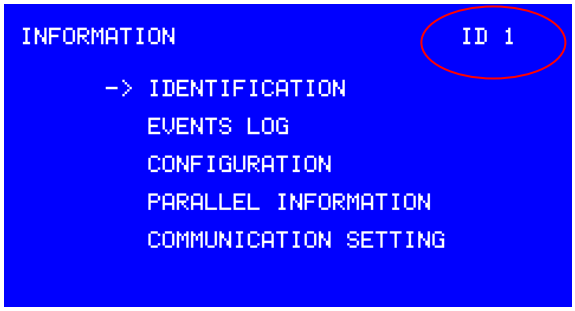

5-2-2-3. PARALLEL INFORMATION

PARALLEL INFORMATION

Num.	1	2	3	4
State	RUN	STOP	FULL	STOP
Amp.	120	120	60	90

Num.	5	6	7	8
State	STOP	RUN	ERROR	STOP
Amp.	90	120	35	60

Num. : Indicate the number of parallel.

State : Indicate the state of the filter.

RUN : The filter is providing the compensating current to the load.
STOP : The filter is shut down and stops to compensate current.
FULL : The filter is operating under full load and compensates the current up to its rated value.
ERROR: There are some possible external abnormal conditions or internal abnormal breakdown and the filter stops to compensate current.

Amp. : Indicate the current rating of the filter.

5-2-2-4. Filter RUN/STOP

This function provides a command for start-up or shutdown the filter individually.

1) In **CONTROL** screen, move the cursor to the **Filter RUN/STOP** by using ▼ ▲ keys and then press ↵ key to enter into the **Filter RUN/STOP** page**.**

2) Please select which filter information you want to start-up or shutdown by using ▼ ▲ ◀ ▶ keys and then press ↵ key to send a command to start-up or shutdown the filter.

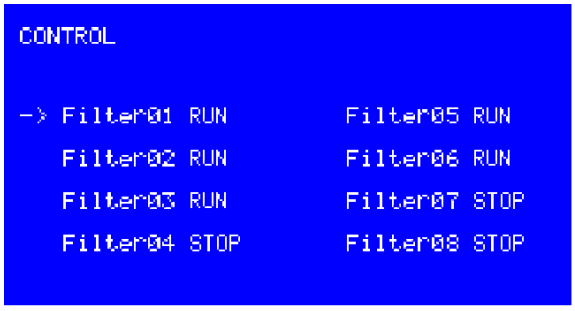

When the filter is filtering, **Filterxx RUN** is displayed**;** on the other hand, **Filterxx STOP** is displayed.

5–3. Power Distribution Unit

An optional Power Distribution Unit (PDU) is offered to connect up to 4 power modules for rack mount application.

The wiring position of PDU is shown in Drawing 5-4.

The power cord wiring of PDU is shown in Drawing 5-5.

The outlook dimension of PDU is shown in Drawing 5-6.

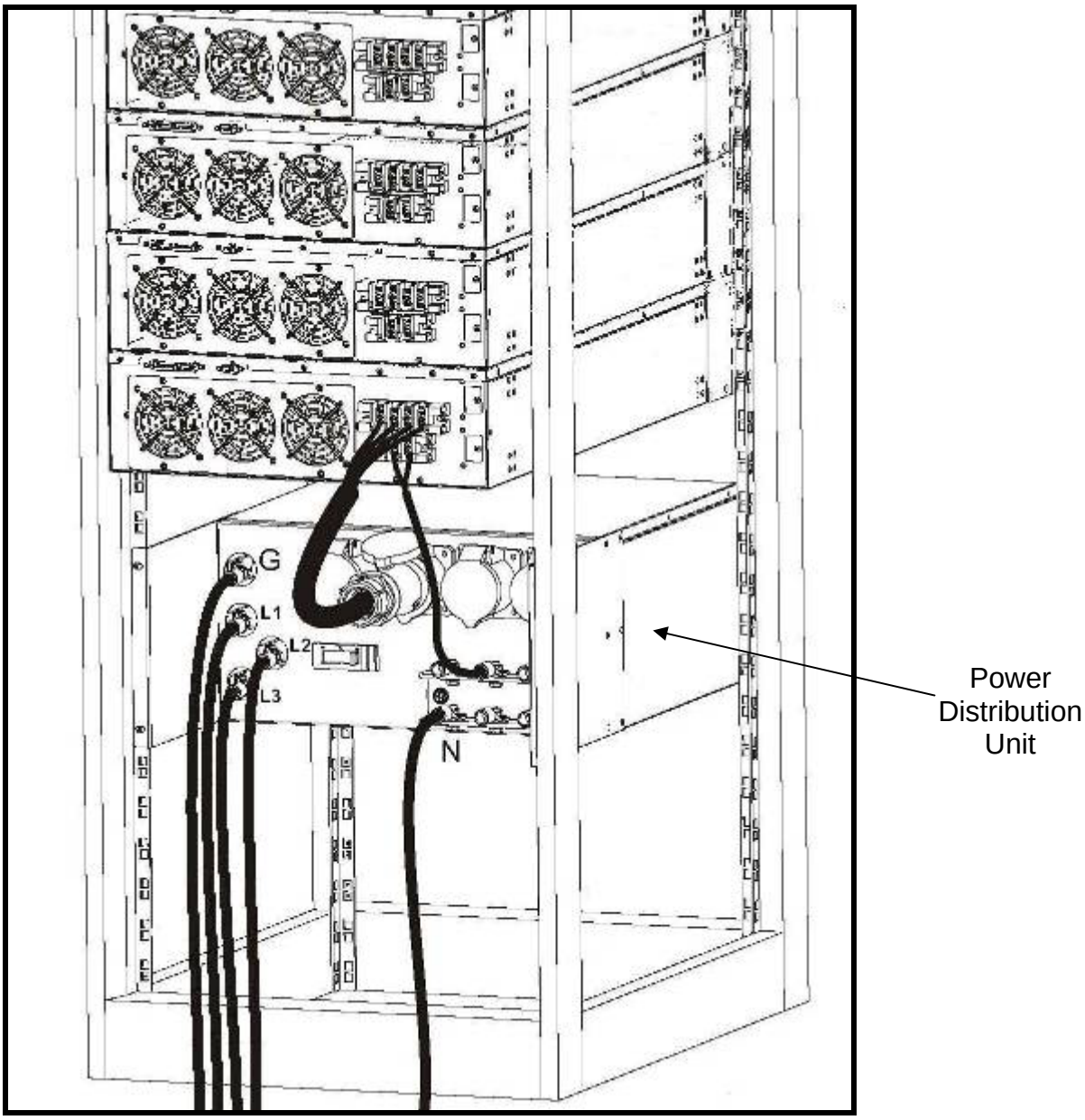

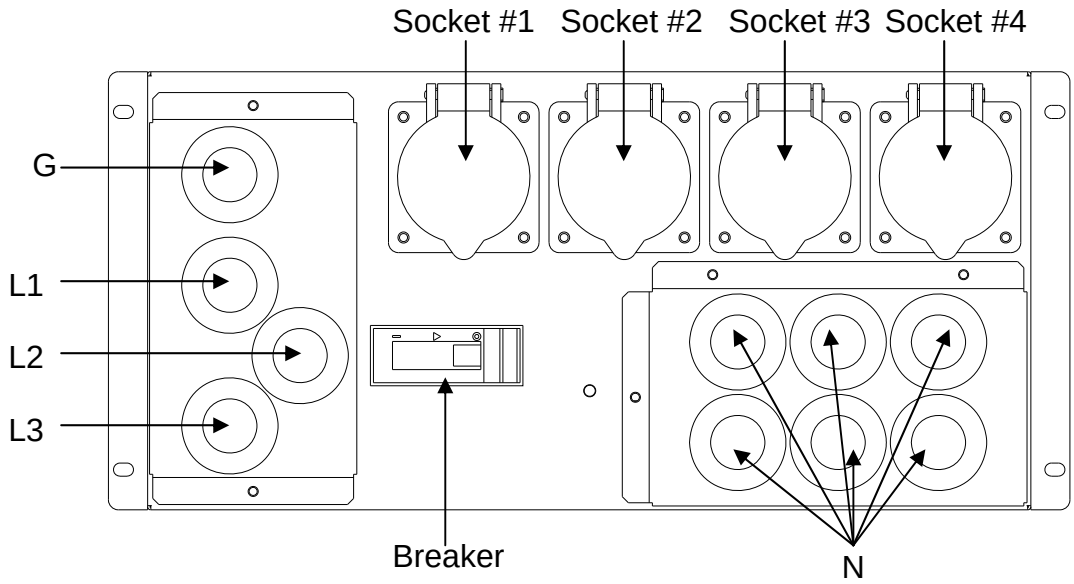

Drawing 5-4 Rear Panel of Power Distribution Unit

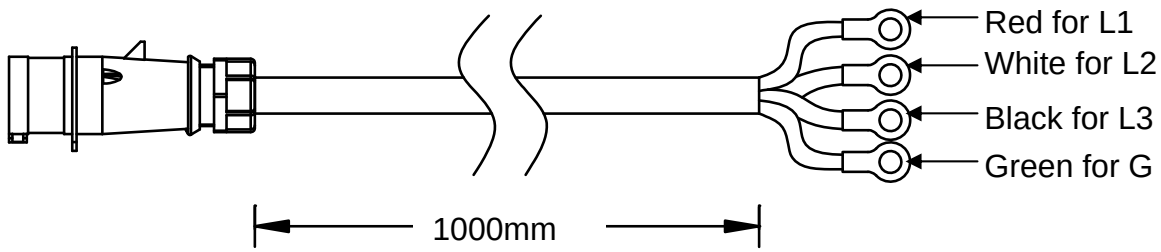

Drawing 5-5 Power Cord of Power Distribution Unit

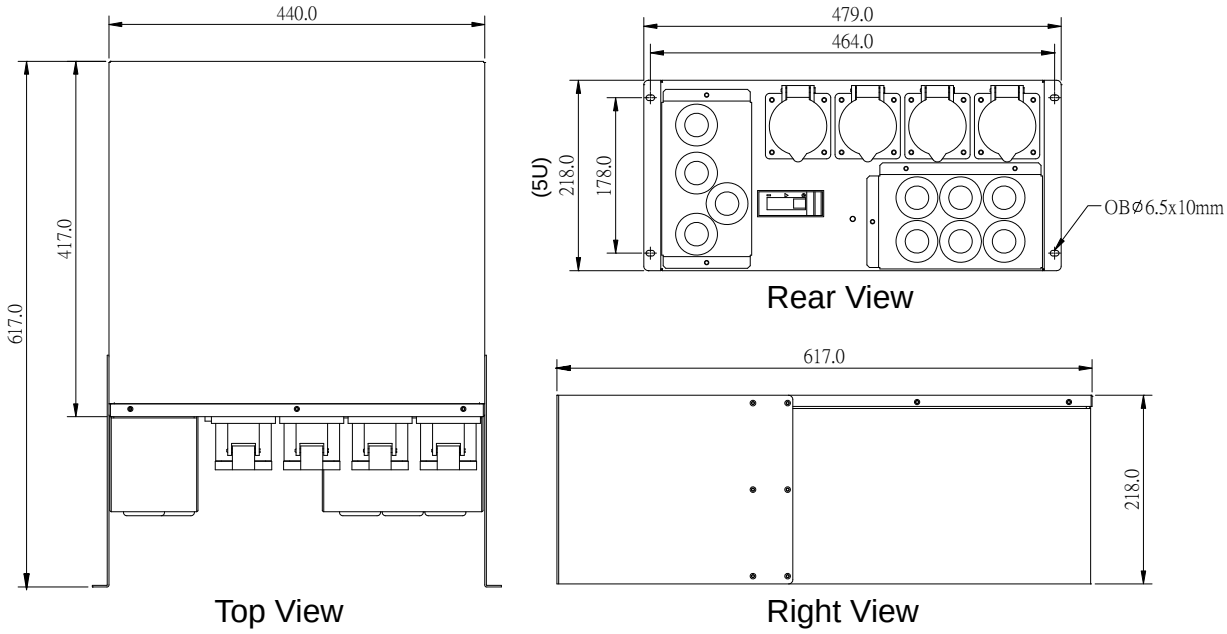

Drawing 5-6 Power Distribution Unit Outlook

5–4. Liebert AF2 Monitoring Software

Liebert AF2 Monitoring Software is to monitor Liebert AF2 Active Harmonic Filter locally or remotely. Operators can use this software to monitor the operational status of AF2 and download the waveform, spectrum and event log data.

Main functions of the software are as follows,

1) Display the status and information of Liebert AF2.
2) Download the Waveform from Liebert AF2.
3) Download the Spectrum from Liebert AF2.
4) Download the Event log from Liebert AF2.
5) Dry Contact Setting
6) Parameter Record
7) Monitor up to 255 Liebert AF2 control modules at the same time.

For more detail information of this software, please refer to "***Liebert AF2* Monitoring Software User Manual**".

Emerson Network Power Asia Pacific (Headquarters)
T: 852-25722201 F: 852-28029250

Australia
T: 1800-065345 F: 61-2-97438737
China
T: 86-755-86010808 F: 86-755-86010909
Hong Kong
T: 852-25722201 F: 852-28310114
India
T: 91-22-25807000 / 2388 F: 91-22-25828358
Indonesia
T: 62-21-2513003 F: 62-21-2510622
Japan
T: 81-3-54038594 F: 81-3-54032924
Korea
T: 82-2-34831502 F: 82-2-5927883
Malaysia
T: 603-7884 5000 F: 603-7884 5188
New Zealand
T: 64-3-3430235 F: 64-3-3430250
Philippines
T: 63-2-8934177 / 178 F: 63-2-8112027
Singapore
T: 65-64672211 F: 65-64670130
Taiwan
T: 886-2-2528 3535 F: 886-2-2528 3100
Thailand
T: 66-2-6178260 F: 66-2-6178277 / 278
Vietnam
T: 84-4-762 8908 F: 84-4-762 8909

Emerson Network Power.
The global leader in enabling business-critical continuity.

www.EmersonNetworkPower.com

- AC Power Systems
- Connectivity
- DC Power Systems
- Embedded Power
- Integrated Cabinet Solutions
- Outside Plant
- Power Switching and Control
- Precision Cooling
- Site Monitoring
- Surge Protection
- Embedded Computing
- Services